Order No: PAPAMY1604052CE

Service Manual

Air Conditioner

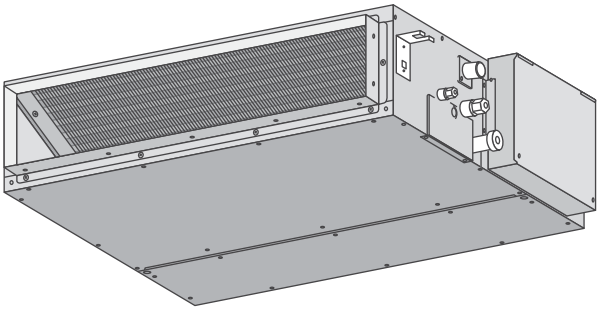

Indoor Unit	Outdoor Unit
CS-E9SD3UAW	CU-E9SD3UA
CS-E12SD3UAW	CU-E12SD3UA
CS-E18SD3UAW	CU-E18SD3UA

Destination
USA

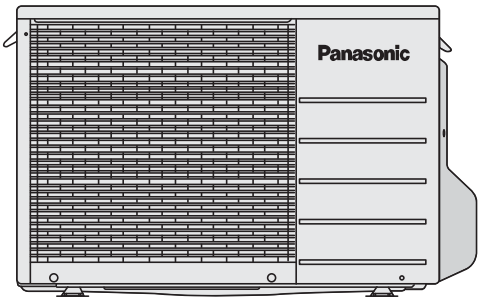

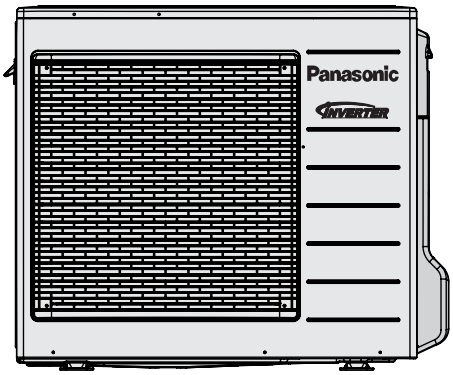

⚠ WARNING

This service information is designed for experienced repair technicians only and is not designed for use by the general public.
It does not contain warnings or cautions to advise non-technical individuals of potential dangers in attempting to service a product.
Products powered by electricity should be serviced or repaired only by experienced professional technicians. Any attempt to service or repair the product or products dealt with in this service information by anyone else could result in serious injury or death.

IMPORTANT SAFETY NOTICE

There are special components used in this equipment which are important for safety. These parts are marked by ⚠ in the Schematic Diagrams, Circuit Board Diagrams, Exploded Views and Replacement Parts List. It is essential that these critical parts should be replaced with manufacturer's specified parts to prevent shock, fire or other hazards. Do not modify the original design without permission of manufacturer.

⚠ PRECAUTION OF LOW TEMPERATURE

In order to avoid frostbite, be assured of no refrigerant leakage during the installation or repairing of refrigerant circuit.

Panasonic®

© Panasonic Corporation 2016

TABLE OF CONTENTS

PAGE

1. Safety Precautions 3

2. Specifications 5

3. Features.....14

4. Location of Controls and Components.....15

4.1 Indoor Unit 15
4.2 Outdoor Unit 15
4.3 Remote Control 15

5. Dimensions 16

5.1 Indoor Unit 16
5.2 Outdoor Unit 17

6. Refrigeration Cycle Diagram 18

6.1 CS-E9SD3UAW CU-E9SD3UA.....18
6.2 CS-E12SD3UAW CU-E12SD3UA.....19
6.3 CS-E18SD3UAW CU-E18SD3UA.....20

7. Block Diagram 21

7.1 CS-E9SD3UAW CU-E9SD3UA
CS-E12SD3UAW CU-E12SD3UA.....21
7.2 CS-E18SD3UAW CU-E18SD3UA.....22

8. Wiring Connection Diagram 23

8.1 Indoor Unit 23
8.2 Outdoor Unit 24

9. Electronic Circuit Diagram 26

9.1 Indoor Unit 26
9.2 Outdoor Unit 27

10. Printed Circuit Board 29

10.1 Indoor Unit 29
10.2 Outdoor Unit 30

11. Installation Instruction 33

11.1 Indoor Unit 35
11.2 Outdoor Unit 43

12. Operation and Control 48

12.1 Basic Function 48
12.2 Quiet Operation (Cooling Mode/Cooling Area of Soft Dry Mode).....51
12.3 Powerful Mode Operation.....52
12.4 Timer Control.....52
12.5 Auto Restart Control.....52
12.6 Indication Panel.....52
12.7 Electric Heater Control 1 53
12.8 Electric Heater Control 2 54

13. Protection Control.....55

13.1 Protection Control For All Operations.....55
13.2 Protection Control For Cooling & Soft Dry Operation.....56
13.3 Protection Control for Heating Operation.....58

14. Servicing Mode.....60

PAGE

14.1 TEST RUN OPERATION (FOR PUMP DOWN/SERVICING PURPOSE) 60
14.2 Auto OFF/ON Button 61
14.3 Cooling Only Operation (Single connection Only, Multi connection please refer to Multi outdoor manual) 62
14.4 Remote Controller Room Temperature Thermoshift Control 63

15. Troubleshooting Guide.....67

15.1 Refrigeration Cycle System.....67
15.2 Relationship Between the Condition of the Air Conditioner and Pressure and Electric Current.....68
15.3 Breakdown Self Diagnosis Function.....69
15.4 Error Codes Table 70
15.5 Self-diagnosis Method 72

16. Disassembly and Assembly Instructions 96

16.1 Indoor Electronic Controller, Blower Fan, Fan Motor & Drain Motor Removal Procedure. 96
16.2 Outdoor Electronic Controller Removal Procedure 99

17. Technical Data 101

17.1 Technical data provided are based on the air conditioner running under free frequency. 101
17.2 Technical data provided are based on the air conditioner running under rated frequency. 104
17.3 Fan Performance..... 107

18. Service Data 110

18.1 Cool Mode Outdoor Air Temperature Characteristic..... 110
18.2 Heat Mode Outdoor Air Temperature Characteristic..... 113
18.3 Piping Length Correction Factor..... 116

19. Exploded View and Replacement Parts List 118

19.1 Indoor Unit 118
19.2 Outdoor Unit 120

1. Safety Precautions

- Read the following “SAFETY PRECAUTIONS” carefully before installation.
- Electrical work must be installed by a licensed electrician. Be sure to use the correct rating of the power plug and main circuit for the model to be installed.
- The caution items stated here must be followed because these important contents are related to safety. The meaning of each indication used is as below. Incorrect installation due to ignoring of the instruction will cause harm or damage, and the seriousness is classified by the following indications.

⚠ **WARNING**	This indication shows the possibility of causing death or serious injury.
⚠ **CAUTION**	This indication shows the possibility of causing injury or damage to properties only.

- The items to be followed are classified by the symbols:

⃠	Symbol with white background denotes item that is PROHIBITED.
❗ ⏚	Symbol with dark background denotes item that must be carried out.

- Carry out test running to confirm that no abnormality occurs after the installation. Then, explain to user the operation, care and maintenance as stated in instructions. Please remind the customer to keep the operating instructions for future reference.

	⚠ **WARNING**	
1.	Do not install outdoor unit near handrail of veranda. When installing air-conditioner unit on veranda of a high rise building, child may climb up to outdoor unit and cross over the handrail causing an accident.	⃠
2.	Do not use unspecified cord, modified cord, joint cord or extension cord for power supply cord. Do not share the single outlet with other electrical appliances. Poor contact, poor insulation or over current will cause electrical shock or fire.	⃠
3.	Do not tie up the power supply cord into a bundle by band. Abnormal temperature rise on power supply cord may happen.	⃠
4.	Do not insert your fingers or other objects into the unit, high speed rotating fan may cause injury.	⃠
5.	Do not sit or step on the unit, you may fall down accidentally.	⃠
6.	Keep plastic bag (packaging material) away from small children, it may cling to nose and mouth and prevent breathing.	⃠
7.	When installing or relocating air conditioner, do not let any substance other than the specified refrigerant, eg. air etc mix into refrigeration cycle (piping). Mixing of air etc will cause abnormal high pressure in refrigeration cycle and result in explosion, injury etc.	⃠
8.	Do not add or replace refrigerant other than specified type. It may cause product damage, burst and injury etc.	⃠
9.	• For R410A model, use piping, flare nut and tools which is specified for R410A refrigerant. Using of existing (R22) piping, flare nut and tools may cause abnormally high pressure in the refrigerant cycle (piping), and possibly result in explosion and injury. • Thickness for copper pipes used with R410A must be more than 1/32" (0.8 mm). Never use copper pipes thinner than 1/32" (0.8 mm). • It is desirable that the amount of residual oil less than 0.0008 oz/ft (40 mg/10 m).	
10.	Engage authorized dealer or specialist for installation. If installation done by the user is incorrect, it will cause water leakage, electrical shock or fire.	
11.	Install according to this installation instructions strictly. If installation is defective, it will cause water leakage, electrical shock or fire.	
12.	Use the attached accessories parts and specified parts for installation. Otherwise, it will cause the set to fall, water leakage, fire or electrical shock.	
13.	Install at a strong and firm location which is able to withstand the set’s weight. If the strength is not enough or installation is not properly done, the set will drop and cause injury.	
14.	For installation work, follow all electrical, building, plumbing, local codes, regulations and these installation instructions. If electrical circuit capacity is not enough or a defect is found in electrical work, it will cause electrical shock or fire.	
15.	Do not use spliced wires for indoor/outdoor connection cable. Use the specified indoor/outdoor connection cable, refer to instruction **CONNECT THE CABLE TO THE INDOOR/OUTDOOR UNIT** and connect tightly for indoor/outdoor connection. Clamp the cable so that no external force will have impact on the terminal. If connection or fixing is not perfect, it will cause heat-up or fire at the connection.	
16.	Wire routing must be properly arranged so that control board cover is fixed properly. If control board cover is not fixed perfectly, it will cause fire or electrical shock.	
17.	This equipment must installed with an Earth Leakage Circuit Breaker (ELCB) or Ground Fault Current Interrupter (GFCI) or Appliance Leakage Current Interrupter (ALCI) that has been certified by an NRTL Certified Testing Agency and that is suitable for the voltages and amperages involved. Otherwise, if may cause electrical shock and fire in case of equipment breakdown.	

18.	During installation, install the refrigerant piping properly before running the compressor. Operation of compressor without fixing refrigeration piping and valves at opened condition will cause suck-in of air, abnormal high pressure in refrigeration cycle and result in explosion, injury etc.
19.	During pump down operation, stop the compressor before removing the refrigeration piping. Removal of refrigeration piping while compressor is operating and valves are opened will cause suck-in of air, abnormal high pressure in refrigeration cycle and result in explosion, injury etc.
20.	Tighten the flare nut with torque wrench according to specified method. If the flare nut is over-tightened, after a long period, the flare may break and cause refrigerant gas leakage.
21.	After completion of installation, confirm there is no leakage of refrigerant gas. It may generate toxic gas when the refrigerant comes into contact with fire.
22.	Ventilate if there is refrigerant gas leakage during operation. It may cause toxic gas when the refrigerant comes into contact with fire.
23.	This equipment must be properly earthed. Earth line must not be connected to gas pipe, water pipe, earth of lightning rod and telephone. Otherwise, it may cause electrical shock in case of equipment breakdown or insulation breakdown.

	CAUTION
1.	Do not install the unit at place where leakage of flammable gas may occur. In case gas leaks and accumulates at surrounding of the unit, it may cause fire.
2.	Do not release refrigerant during piping work for installation, re-installation and during repairing a refrigeration parts. Take care of the liquid refrigerant, it may cause frostbite.
3.	Do not install this appliance in a laundry room or other location where water may drip from the ceiling, etc.
4.	Do not touch the sharp aluminium fin, sharp parts may cause injury.
5.	Carry out drainage piping as mentioned in installation instructions. If drainage is not perfect, water may enter the room and damage the furniture.
6.	Select an installation location which is easy for maintenance.
7.	Power supply connection to the room air conditioner. Power supply cord shall be UL listed or CSA approved 3 conductor with minimum AWG14 (E9SD3UAW, E12SD3UAW) and AWG12 (E18SD3UAW) wires. Power supply point should be in an easily accessible place for power disconnection in case of emergency. In some countries, permanent connection of this air conditioner to the power supply is prohibited. Fix power supply connection to a circuit breaker for permanent connection. Use NRTL approved fuse or circuit breaker (rating refers to name plate) for permanent connection.
8.	Installation work. It may take two people to carry out the installation work.

2. Specifications

MODEL		INDOOR	CS-E9SD3UAW					
		OUTDOOR	CU-E9SD3UA					
Performance Test Condition			ARI					
Power Supply		Phase, Hz	Single, 60					
		V	208			230		
			Min.	Mid.	Max.	Min.	Mid.	Max.
Cooling	Capacity	kW	1.20	2.64	3.00	1.20	2.64	3.00
		BTU/h	4100	9000	10200	4100	9000	10200
	Running Current	A	-	3.6	-	-	3.2	-
	Input Power	W	250	690	850	250	690	850
	EER	W/W	4.80	3.82	3.53	4.80	3.82	3.53
		BTU/hW	16.40	13.00	12.00	16.40	13.00	12.00
	Power Factor	%	-	92	-	-	94	-
	Indoor Noise (H / L / QLo)	dB-A	35 / 28 / 25			35 / 28 / 25		
		Power Level dB	51 / - / -			51 / - / -		
	Outdoor Noise (H / L / QLo)	dB-A	48 / - / -			48 / - / -		
		Power Level dB	63 / - / -			63 / - / -		
Heating	Capacity	kW	1.20	3.51	4.14	1.20	3.51	4.14
		BTU/h	4100	12000	14100	4100	12000	14100
	Running Current	A	-	5.7	-	-	5.1	-
	Input Power	W	200	1.12k	1.50k	200	1.12k	1.50k
	COP	W/W	6.00	3.12	2.76	6.00	3.12	2.76
		BTU/hW	20.50	10.70	9.40	20.50	10.70	9.40
	Power Factor	%	-	96	-	-	97	-
	Indoor Noise (H / L / QLo)	dB-A	35 / 28 / 25			35 / 28 / 25		
		Power Level dB	51 / - / -			51 / - / -		
	Outdoor Noise (H / L / QLo)	dB-A	50 / - / -			50 / - / -		
		Power Level dB	65 / - / -			65 / - / -		
Min Circuit Ampacity			15.00					
Max. Overcurrent Protection			15.00					
Max Current (A) / Max Input Power (W)			7.0 / 1.57k					
Starting Current (A)			5.70					
SEER/HSPF			20.50 / 10.00					

MODEL				INDOOR	CS-E9SD3UAW
				OUTDOOR	CU-E9SD3UA
Compressor		Type			Hermetic Motor / Rotary
		Motor Type			Brushless (4-poles)
		Output Power			700
Indoor Fan	Type				Sirocco
	Material				GFZ010A / GF20
	Motor Type				DC Motor (8-poles)
	Output Power			W	51
	Speed	QLo	Cool	rpm	880
			Heat	rpm	800
		Lo	Cool	rpm	940
			Heat	rpm	880
		Me	Cool	rpm	1120
			Heat	rpm	1090
		Hi	Cool	rpm	1300
			Heat	rpm	1300
		SHi	Cool	rpm	1380
			Heat	rpm	1380
Outdoor Fan	Type				Propeller Fan
	Material				PP
	Motor Type				DC Motor (8-poles)
	Output Power			W	40
	Speed	Hi	Cool	rpm	830
			Heat	rpm	780
Moisture Removal				L/h (Pt/h)	0.6 (1.3)
Indoor Airflow		QLo	Cool	m^3/min (ft^3/min)	9.30 (328)
			Heat	m^3/min (ft^3/min)	8.50 (300)
		Lo	Cool	m^3/min (ft^3/min)	9.90 (350)
			Heat	m^3/min (ft^3/min)	9.30 (328)
		Me	Cool	m^3/min (ft^3/min)	11.70 (413)
			Heat	m^3/min (ft^3/min)	11.40 (403)
		Hi	Cool	m^3/min (ft^3/min)	13.50 (475)
			Heat	m^3/min (ft^3/min)	13.50 (475)
		SHi	Cool	m^3/min (ft^3/min)	14.30 (505)
			Heat	m^3/min (ft^3/min)	14.30 (505)
Outdoor Airflow		Hi	Cool	m^3/min (ft^3/min)	31.0 (1095)
			Heat	m^3/min (ft^3/min)	31.0 (1095)
Refrigeration Cycle		Control Device			Expansion Valve
		Refrigerant Oil		cm^3	FV50S (320)
		Refrigerant Type		g (oz)	R410A, 980 (34.6)
Dimension		Height (I/D / O/D)		mm (inch)	200 (7-7/8) / 542 (21-11/32)
		Width (I/D / O/D)		mm (inch)	750 (29-17/32) / 780 (30-23/32)
		Depth (I/D / O/D)		mm (inch)	640 (25-7/32) / 289 (11-13/32)
Weight		Net (I/D / O/D)		kg (lb)	19 (42) / 37 (82)

MODEL			INDOOR	CS-E9SD3UAW	
			OUTDOOR	CU-E9SD3UA	
Piping	Pipe Diameter (Liquid / Gas)		mm (inch)	6.35 (1/4) / 9.52 (3/8)	
	Standard Length		m (ft)	7.5 (24.6)	
	Length Range (min - max)		m (ft)	3 (9.8) ~ 20 (65.6)	
	I/D & O/D Height Different		m (ft)	15 (49.2)	
	Additional Gas Amount		g/m (oz/ft)	20 (0.2)	
	Length for Additional Gas		m (ft)	7.5 (24.6)	
Drain Hose	Inner Diameter		mm/inch	16 / 0.63	
	Length		mm/inch	117.5 / 4.63	
Indoor Heat Exchanger	Fin Material			Aluminium (Pre Coat)	
	Fin Type			Slit Fin	
	Row x Stage x FPI			3 x 12 x 18	
	Size (W x H x L)		mm	590 x 282 x 38.1	
Outdoor Heat Exchanger	Fin Material			Aluminium (Blue Coat)	
	Fin Type			Corrugated Fin	
	Row x Stage x FPI			2 x 24 x 17	
	Size (W x H x L)		mm	36.4 x 504 x 713:684	
Power Supply				Outdoor Power Supply	
Power Supply Cord			A	Nil	
Thermostat				Electronic Control	
Protection Device				Electronic Control	
				Dry Bulb	Wet Bulb
Indoor Operation Range	Cooling		Maximum °C/°F	32 / 89.6	23 / 73.4
			Minimum °C/°F	16 / 60.8	11 / 51.8
	Heating		Maximum °C/°F	30 / 86.0	- / -
			Minimum °C/°F	16 / 60.8	- / -
Outdoor Operation Range	Cooling		Maximum °C/°F	46 / 114.8	26 / 78.8
			Minimum °C/°F	-17.8 / 0	- / -
	Heating		Maximum °C/°F	24 / 75.2	18 / 64.4
			Minimum °C/°F	-20 / -4	-21 / -5.8

1. Cooling capacities are based on indoor temperature of 27°C Dry Bulb (80.6°F Dry Bulb), 19.0°C Wet Bulb (66.2°F Wet Bulb) and outdoor air temperature of 35°C Dry Bulb (95°F Dry Bulb), 24°C Wet Bulb (75.2°F Wet Bulb)
2. Heating capacities are based on indoor temperature of 20°C Dry Bulb (68°F Dry Bulb) and outdoor air temperature of 7°C Dry Bulb (44.6°F Dry Bulb), 6°C Wet Bulb (42.8°F Wet Bulb)

※3 Heating low temperature capacity, Input Power and COP measured at 230 V, indoor temperature 20°C (68°F), outdoor 2/1°C (35°F/33.8°F)

※4 Heating extreme low temperature capacity, Input Power and COP measured at 230 V indoor temperature 20°C (68°F), outdoor -7/-8°C (19.4°F/17.6°F)

5. Standby power consumption ≤0.7W (when switched OFF by remote control, except under self protection control).
6. Specifications are subjected to change without notice for further improvement.

MODEL		INDOOR	CS-E12SD3UAW					
		OUTDOOR	CU-E12SD3UA					
Performance Test Condition			ARI					
Power Supply		Phase, Hz	Single, 60					
		V	208			230		
			Min.	Mid.	Max.	Min.	Mid.	Max.
Cooling	Capacity	kW	1.20	3.36	3.90	1.20	3.36	3.90
		BTU/h	4100	11500	13300	4100	4100	13300
	Running Current	A	-	4.7	-	-	4.2	-
	Input Power	W	250	920	1.15k	250	920	1.15k
	EER	W/W	4.80	3.64	3.39	4.80	3.64	3.39
		BTU/hW	16.40	12.50	11.55	16.40	12.50	11.55
	Power Factor	%	-	94	-	-	95	-
	Indoor Noise (H / L / QLo)	dB-A	35 / 28 / 25			35 / 28 / 25		
		Power Level dB	51 / - / -			51 / - / -		
	Outdoor Noise (H / L / QLo)	dB-A	49 / - / -			49 / - / -		
		Power Level dB	64 / - / -			64 / - / -		
Heating	Capacity	kW	1.20	4.05	4.77	1.20	4.05	4.77
		BTU/h	4100	13800	16300	4100	13800	16300
	Running Current	A	-	6.3	-	-	5.6	-
	Input Power	W	200	1.25k	1.71k	200	1.25k	1.71k
	COP	W/W	6.00	3.24	2.79	6.00	3.24	2.79
		BTU/hW	20.50	11.00	9.50	20.50	11.00	9.50
	Power Factor	%	-	95	-	-	97	-
	Indoor Noise (H / L / QLo)	dB-A	35 / 28 / 25			35 / 28 / 25		
		Power Level dB	51 / - / -			51 / - / -		
	Outdoor Noise (H / L / QLo)	dB-A	51 / - / -			51 / - / -		
		Power Level dB	66 / - / -			66 / - / -		
Min Circuit Ampacity			15.00					
Max. Overcurrent Protection			15.00					
Max Current (A) / Max Input Power (W)			7.8 / 1.71k					
Starting Current (A)			6.30					
SEER/HSPF			20.00 / 10.00					

MODEL				INDOOR	CS-E12SD3UAW
				OUTDOOR	CU-E12SD3UA
Compressor		Type			Hermetic Motor / Rotary
Compressor		Motor Type			Brushless (4-poles)
Compressor		Output Power			700
Indoor Fan	Type				Sirocco
Indoor Fan	Material				GFZ010A / GF20
Indoor Fan	Motor Type				DC Motor (8-poles)
Indoor Fan	Output Power			W	51
Indoor Fan	Speed	QLo	Cool	rpm	880
Indoor Fan	Speed	QLo	Heat	rpm	800
Indoor Fan	Speed	Lo	Cool	rpm	940
Indoor Fan	Speed	Lo	Heat	rpm	880
Indoor Fan	Speed	Me	Cool	rpm	1120
Indoor Fan	Speed	Me	Heat	rpm	1090
Indoor Fan	Speed	Hi	Cool	rpm	1300
Indoor Fan	Speed	Hi	Heat	rpm	1300
Indoor Fan	Speed	SHi	Cool	rpm	1430
Indoor Fan	Speed	SHi	Heat	rpm	1430
Outdoor Fan	Type				Propeller Fan
Outdoor Fan	Material				PP
Outdoor Fan	Motor Type				DC Motor (8-poles)
Outdoor Fan	Output Power			W	40
Outdoor Fan	Speed	Hi	Cool	rpm	830
Outdoor Fan	Speed	Hi	Heat	rpm	820
Moisture Removal				L/h (Pt/h)	0.8 (1.7)
Indoor Airflow		QLo	Cool	m^3/min (ft^3/min)	9.30 (328)
Indoor Airflow		QLo	Heat	m^3/min (ft^3/min)	8.50 (300)
Indoor Airflow		Lo	Cool	m^3/min (ft^3/min)	9.90 (350)
Indoor Airflow		Lo	Heat	m^3/min (ft^3/min)	9.30 (328)
Indoor Airflow		Me	Cool	m^3/min (ft^3/min)	11.70 (413)
Indoor Airflow		Me	Heat	m^3/min (ft^3/min)	11.40 (403)
Indoor Airflow		Hi	Cool	m^3/min (ft^3/min)	13.50 (475)
Indoor Airflow		Hi	Heat	m^3/min (ft^3/min)	13.50 (475)
Indoor Airflow		SHi	Cool	m^3/min (ft^3/min)	14.80 (523)
Indoor Airflow		SHi	Heat	m^3/min (ft^3/min)	14.80 (523)
Outdoor Airflow		Hi	Cool	m^3/min (ft^3/min)	31.2 (1100)
Outdoor Airflow		Hi	Heat	m^3/min (ft^3/min)	31.2 (1100)
Refrigeration Cycle		Control Device			Expansion Valve
Refrigeration Cycle		Refrigerant Oil		cm^3	FV50S (320)
Refrigeration Cycle		Refrigerant Type		g (oz)	R410A, 1.08k (38.1)
Dimension		Height (I/D / O/D)		mm (inch)	200 (7-7/8) / 542 (21-11/32)
Dimension		Width (I/D / O/D)		mm (inch)	750 (29-17/32) / 780 (30-23/32)
Dimension		Depth (I/D / O/D)		mm (inch)	640 (25-7/32) / 289 (11-13/32)
Weight		Net (I/D / O/D)		kg (lb)	19 (42) / 37 (82)

MODEL			INDOOR	CS-E12SD3UAW	
			OUTDOOR	CU-E12SD3UA	
Piping	Pipe Diameter (Liquid / Gas)		mm (inch)	6.35 (1/4) / 12.70 (1/2)	
	Standard Length		m (ft)	7.5 (24.6)	
	Length Range (min - max)		m (ft)	3 (9.8) ~ 20 (65.6)	
	I/D & O/D Height Different		m (ft)	15 (49.2)	
	Additional Gas Amount		g/m (oz/ft)	20 (0.2)	
	Length for Additional Gas		m (ft)	7.5 (24.6)	
Drain Hose	Inner Diameter		mm/inch	16 / 0.63	
	Length		mm/inch	117.5 / 4.63	
Indoor Heat Exchanger	Fin Material			Aluminium (Pre Coat)	
	Fin Type			Slit Fin	
	Row x Stage x FPI			3 x 12 x 18	
	Size (W x H x L)		mm	590 x 282 x 38.1	
Outdoor Heat Exchanger	Fin Material			Aluminium (Blue Coat)	
	Fin Type			Corrugated Fin	
	Row x Stage x FPI			2 x 24 x 17	
	Size (W x H x L)		mm	36.4 x 504 x 824:794	
Power Supply				Outdoor Power Supply	
Power Supply Cord			A	Nil	
Thermostat				Electronic Control	
Protection Device				Electronic Control	
				Dry Bulb	Wet Bulb
Indoor Operation Range	Cooling		Maximum °C/°F	32 / 89.6	23 / 73.4
			Minimum °C/°F	16 / 60.8	11 / 51.8
	Heating		Maximum °C/°F	30 / 86.0	- / -
			Minimum °C/°F	16 / 60.8	- / -
Outdoor Operation Range	Cooling		Maximum °C/°F	46 / 114.8	26 / 78.8
			Minimum °C/°F	-17.8 / 0	- / -
	Heating		Maximum °C/°F	24 / 75.2	18 / 64.4
			Minimum °C/°F	-20 / -4	-21 / -5.8

1. Cooling capacities are based on indoor temperature of 27°C Dry Bulb (80.6°F Dry Bulb), 19.0°C Wet Bulb (66.2°F Wet Bulb) and outdoor air temperature of 35°C Dry Bulb (95°F Dry Bulb), 24°C Wet Bulb (75.2°F Wet Bulb)
2. Heating capacities are based on indoor temperature of 20°C Dry Bulb (68°F Dry Bulb) and outdoor air temperature of 7°C Dry Bulb (44.6°F Dry Bulb), 6°C Wet Bulb (42.8°F Wet Bulb)

※3 Heating low temperature capacity, Input Power and COP measured at 230 V, indoor temperature 20°C (68°F), outdoor 2/1°C (35°F/33.8°F)

※4 Heating extreme low temperature capacity, Input Power and COP measured at 230 V indoor temperature 20°C (68°F), outdoor -7/-8°C (19.4°F/17.6°F)

5. Standby power consumption ≤0.7W (when switched OFF by remote control, except under self protection control).
6. Specifications are subjected to change without notice for further improvement.

MODEL		INDOOR	CS-E18SD3UAW					
		OUTDOOR	CU-E18SD3UA					
Performance Test Condition			ARI					
Power Supply		Phase, Hz	Single, 60					
		V	208			230		
			Min.	Mid.	Max.	Min.	Mid.	Max.
Cooling	Capacity	kW	1.70	5.04	5.70	1.70	5.04	5.70
		BTU/h	5800	17200	19400	5800	17200	19400
	Running Current	A	-	8.5	-	-	7.6	-
	Input Power	W	430	1.58k	1.82k	430	1.58k	1.82k
	EER	W/W	3.95	3.18	3.13	3.95	3.18	3.13
		BTU/hW	13.45	10.85	10.65	13.45	10.85	10.65
	Power Factor	%	-	89	-	-	90	-
	Indoor Noise (H / L / QLo)	dB-A	41 / 30 / 27			41 / 30 / 27		
		Power Level dB	57 / - / -			57 / - / -		
	Outdoor Noise (H / L / QLo)	dB-A	49 / - / -			49 / - / -		
		Power Level dB	63 / - / -			63 / - / -		
Heating	Capacity	kW	1.70	6.09	7.10	1.70	6.09	7.10
		BTU/h	5800	20800	24200	5800	20800	24200
	Running Current	A	-	9.8	-	-	8.7	-
	Input Power	W	380	1.83k	2.18k	380	1.83k	2.18k
	COP	W/W	4.47	3.32	3.26	4.47	3.32	3.26
		BTU/hW	15.25	11.35	11.10	15.25	11.35	11.10
	Power Factor	%	-	90	-	-	91	-
	Indoor Noise (H / L / QLo)	dB-A	41 / 32 / 29			41 / 32 / 29		
		Power Level dB	57 / - / -			57 / - / -		
	Outdoor Noise (H / L / QLo)	dB-A	51 / - / -			51 / - / -		
		Power Level dB	65 / - / -			65 / - / -		
Min Circuit Ampacity			20.0					
Max. Overcurrent Protection			25.0					
Max Current (A) / Max Input Power (W)			13.7 / 3.06k					
Starting Current (A)			9.80					
SEER/HSPF			16.50 / 8.50					

MODEL				INDOOR	CS-E18SD3UAW
				OUTDOOR	CU-E18SD3UA
Compressor	Type				Hermetic Motor / Rotary
	Motor Type				Brushless (4-poles)
	Output Power				1.70k
Indoor Fan	Type				Sirocco
	Material				GFZ010A / GF20
	Motor Type				DC Motor (8-poles)
	Output Power			W	51
	Speed	QLo	Cool	rpm	920
			Heat	rpm	920
		Lo	Cool	rpm	980
			Heat	rpm	1000
		Me	Cool	rpm	1230
			Heat	rpm	1240
		Hi	Cool	rpm	1480
			Heat	rpm	1480
		SHi	Cool	rpm	1530
			Heat	rpm	1530
Outdoor Fan	Type				Propeller Fan
	Material				PP
	Motor Type				DC Motor (8-poles)
	Output Power			W	60
	Speed	Hi	Cool	rpm	700
			Heat	rpm	700
Moisture Removal				L/h (Pt/h)	2.2 (4.6)
Indoor Airflow		QLo	Cool	m^3/min (ft^3/min)	9.70 (342)
			Heat	m^3/min (ft^3/min)	9.70 (342)
		Lo	Cool	m^3/min (ft^3/min)	10.30 (364)
			Heat	m^3/min (ft^3/min)	10.30 (364)
		Me	Cool	m^3/min (ft^3/min)	12.80 (452)
			Heat	m^3/min (ft^3/min)	12.80 (452)
		Hi	Cool	m^3/min (ft^3/min)	15.30 (540)
			Heat	m^3/min (ft^3/min)	15.30 (540)
		SHi	Cool	m^3/min (ft^3/min)	15.80 (558)
			Heat	m^3/min (ft^3/min)	15.80 (558)
Outdoor Airflow		Hi	Cool	m^3/min (ft^3/min)	54.5 (1925)
			Heat	m^3/min (ft^3/min)	54.5 (1925)
Refrigeration Cycle	Control Device				Expansion Valve
	Refrigerant Oil			cm^3	FV50S (800)
	Refrigerant Type			g (oz)	R410A, 1.60k (56.5)
Dimension	Height (I/D / O/D)			mm (inch)	200 (7-7/8) / 795 (31-5/16)
	Width (I/D / O/D)			mm (inch)	750 (29-17/32) / 875 (34-15/32)
	Depth (I/D / O/D)			mm (inch)	640 (25-7/32) / 320 (12-5/8)
Weight	Net (I/D / O/D)			kg (lb)	19 (42) / 60 (132)

MODEL			INDOOR	CS-E18SD3UAW	
			OUTDOOR	CU-E18SD3UA	
Piping	Pipe Diameter (Liquid / Gas)		mm (inch)	6.35 (1/4) / 12.70 (1/2)	
	Standard Length		m (ft)	7.5 (24.6)	
	Length Range (min - max)		m (ft)	3 (9.8) ~ 30.5 (100.0)	
	I/D & O/D Height Different		m (ft)	15 (49.2)	
	Additional Gas Amount		g/m (oz/ft)	25 (0.3)	
	Length for Additional Gas		m (ft)	10 (32.8)	
Drain Hose	Inner Diameter		mm/inch	16 / 0.63	
	Length		mm/inch	117.5 / 4.63	
Indoor Heat Exchanger	Fin Material			Aluminium (Pre Coat)	
	Fin Type			Slit Fin	
	Row x Stage x FPI			3 x 12 x 18	
	Size (W x H x L)		mm	590 x 282 x 38.1	
Outdoor Heat Exchanger	Fin Material			Aluminium (Blue Coat)	
	Fin Type			Corrugated Fin	
	Row x Stage x FPI			2 x 36 x 19	
	Size (W x H x L)		mm	36.4 x 756 x 869:897	
Power Supply				Outdoor Power Supply	
Power Supply Cord			A	Nil	
Thermostat				Electronic Control	
Protection Device				Electronic Control	
				Dry Bulb	Wet Bulb
Indoor Operation Range	Cooling		Maximum °C/°F	32 / 89.6	23 / 73.4
			Minimum °C/°F	16 / 60.8	11 / 51.8
	Heating		Maximum °C/°F	30 / 86.0	- / -
			Minimum °C/°F	16 / 60.8	- / -
Outdoor Operation Range	Cooling		Maximum °C/°F	46 / 114.8	26 / 78.8
			Minimum °C/°F	-17.8 / 0	- / -
	Heating		Maximum °C/°F	24 / 75.2	18 / 64.4
			Minimum °C/°F	-20 / -4	-21 / -5.8

1. Cooling capacities are based on indoor temperature of 27°C Dry Bulb (80.6°F Dry Bulb), 19.0°C Wet Bulb (66.2°F Wet Bulb) and outdoor air temperature of 35°C Dry Bulb (95°F Dry Bulb), 24°C Wet Bulb (75.2°F Wet Bulb)
2. Heating capacities are based on indoor temperature of 20°C Dry Bulb (68°F Dry Bulb) and outdoor air temperature of 7°C Dry Bulb (44.6°F Dry Bulb), 6°C Wet Bulb (42.8°F Wet Bulb)

※3 Heating low temperature capacity, Input Power and COP measured at 230 V, indoor temperature 20°C (68°F), outdoor 2/1°C (35°F/33.8°F)

※4 Heating extreme low temperature capacity, Input Power and COP measured at 230 V indoor temperature 20°C (68°F), outdoor -7/-8°C (19.4°F/17.6°F)

5. Standby power consumption ≤0.7W (when switched OFF by remote control, except under self protection control).
6. Specifications are subjected to change without notice for further improvement.

3. Features

- **Inverter Technology**
  - Wider output power range
  - Energy saving
  - Quick Cooling
  - Quick Heating
  - More precise temperature control

- **Environment Protection**
  - Non-ozone depletion substances refrigerant (R410A)

- **Long Installation Piping**
  - Long piping up to 20 meter (E9SD3UA/E12SD3UA)
  - Long piping up to 30.5 meter (E18SD3UA)

- **Easy to use remote control**

- **Quality Improvement**
  - Random auto restart after power failure for safety restart operation
  - Gas leakage protection
  - Prevent compressor reverse cycle
  - Inner protector to protect compressor
  - Noise prevention during soft dry operation

- **Operation Improvement**
  - Quiet mode to reduce the indoor unit operating sound
  - Powerful mode to reach the desired room temperature quickly
  - 24-hour timer setting

- **Serviceability Improvement**
  - Breakdown Self Diagnosis function

4. Location of Controls and Components

4.1 Indoor Unit

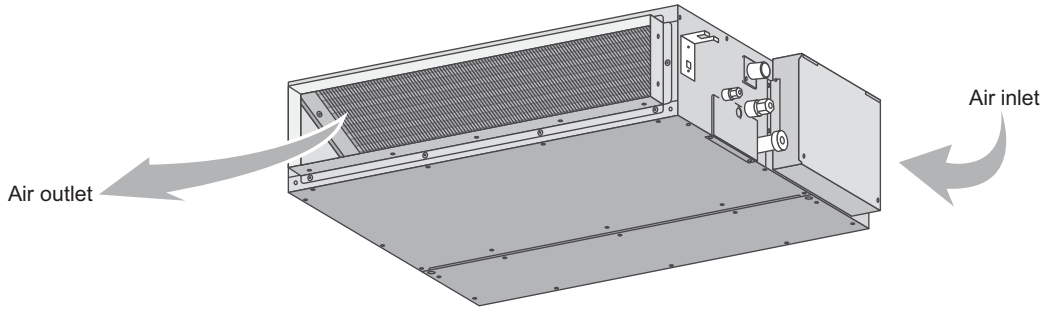

4.2 Outdoor Unit

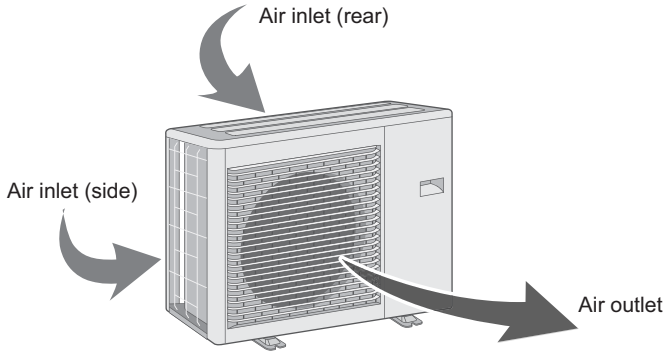

4.3 Remote Control

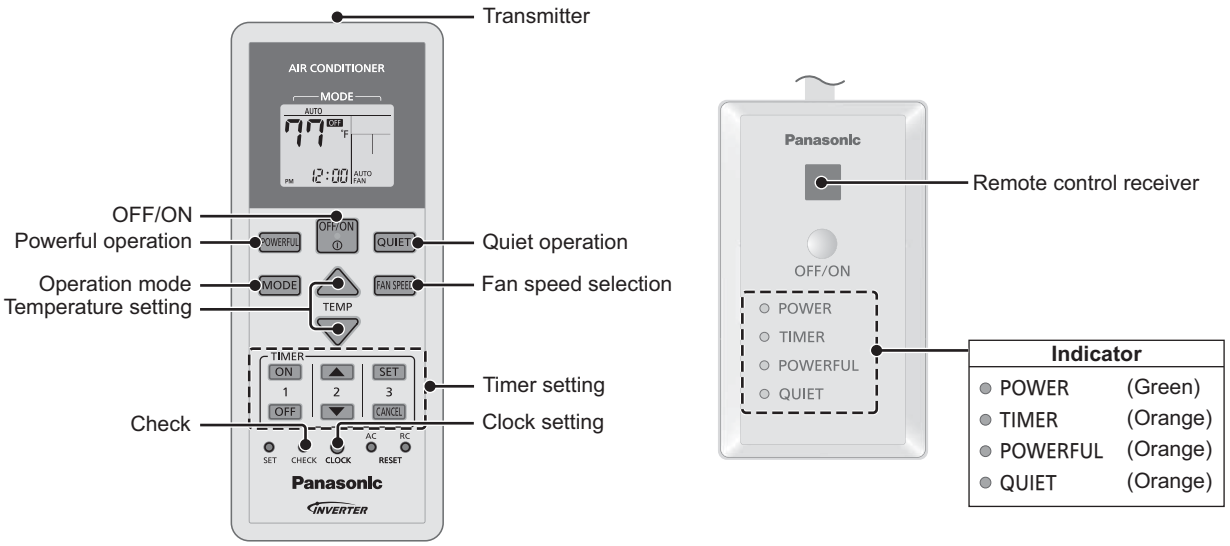

5. Dimensions

5.1 Indoor Unit

<Front View>

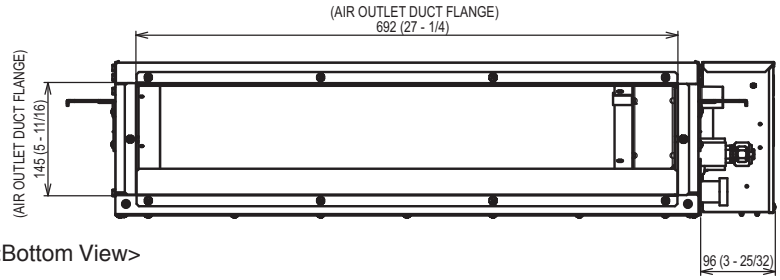

<Bottom View>

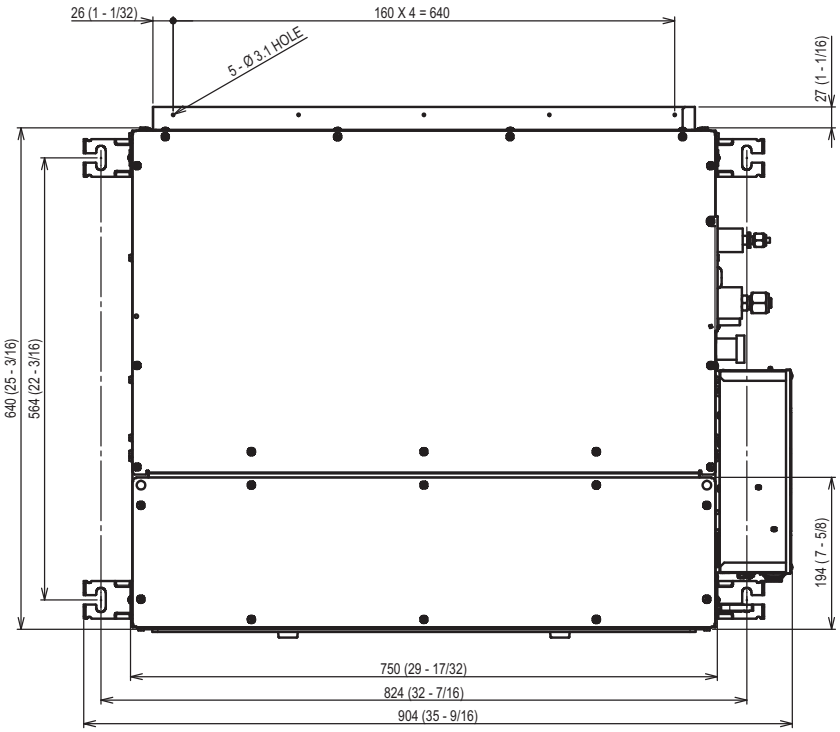

<Side View>

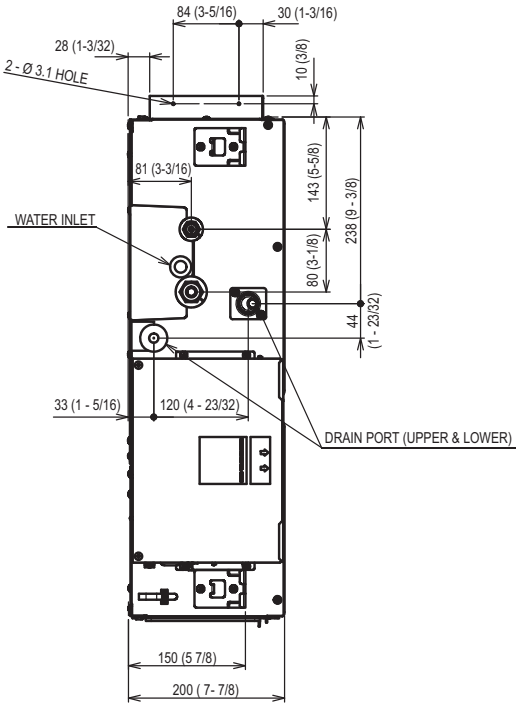

<Back View>

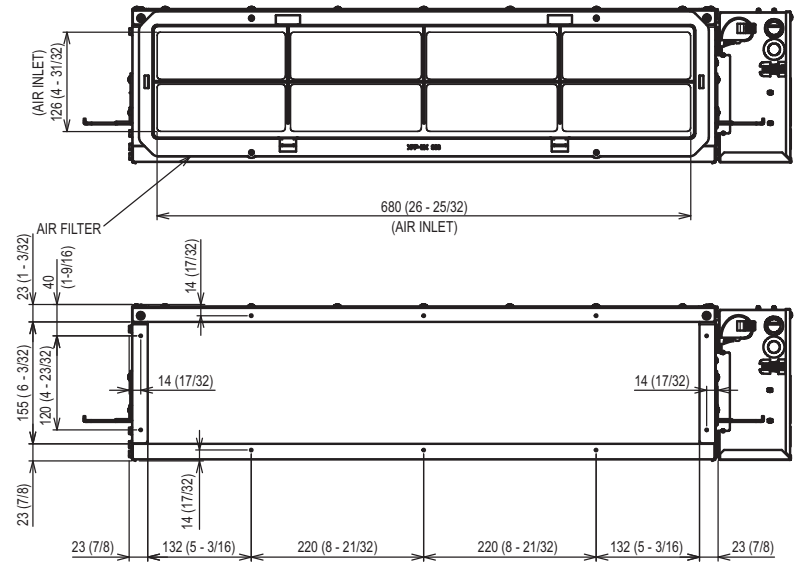

<Remote Control>

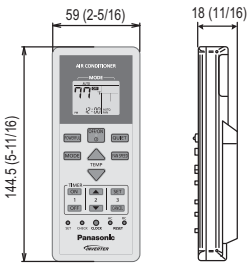

<Remote Control Holder>

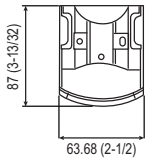

Unit : mm/inch

5.2 Outdoor Unit

5.2.1 CU-E9SD3UA CU-E12SD3UA

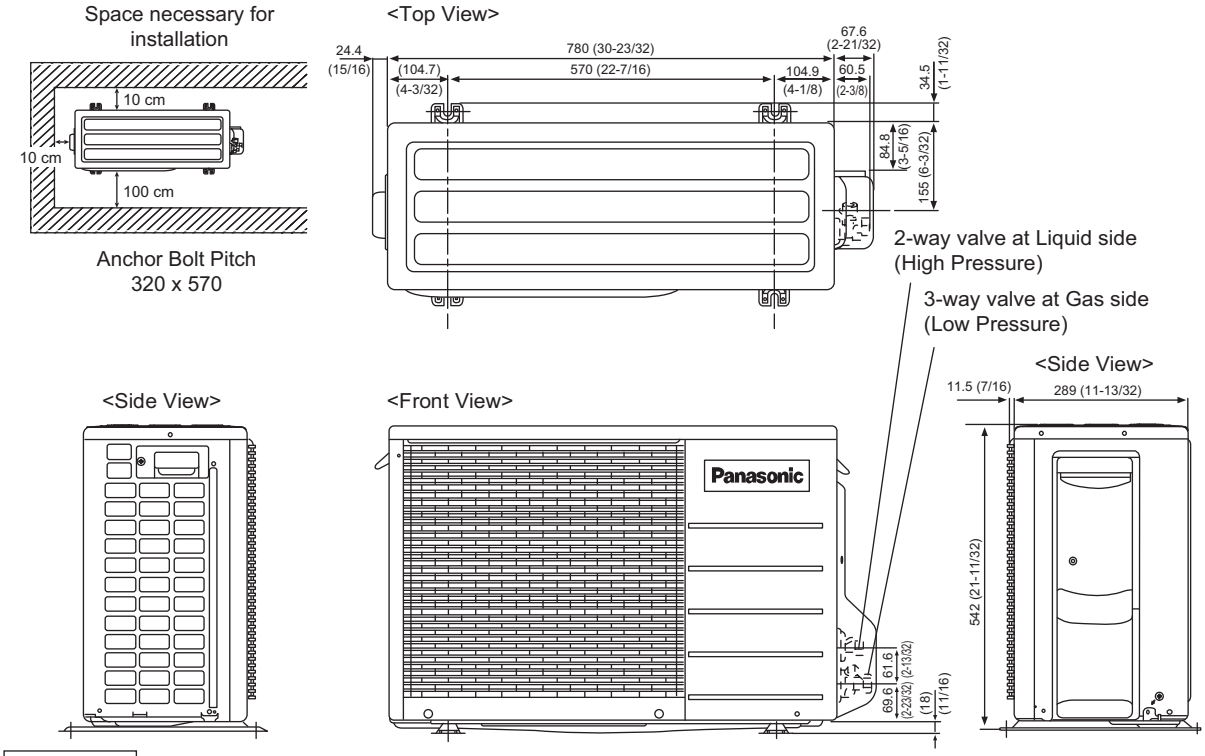

Unit : mm/inch

5.2.2 CU-E18SD3UA

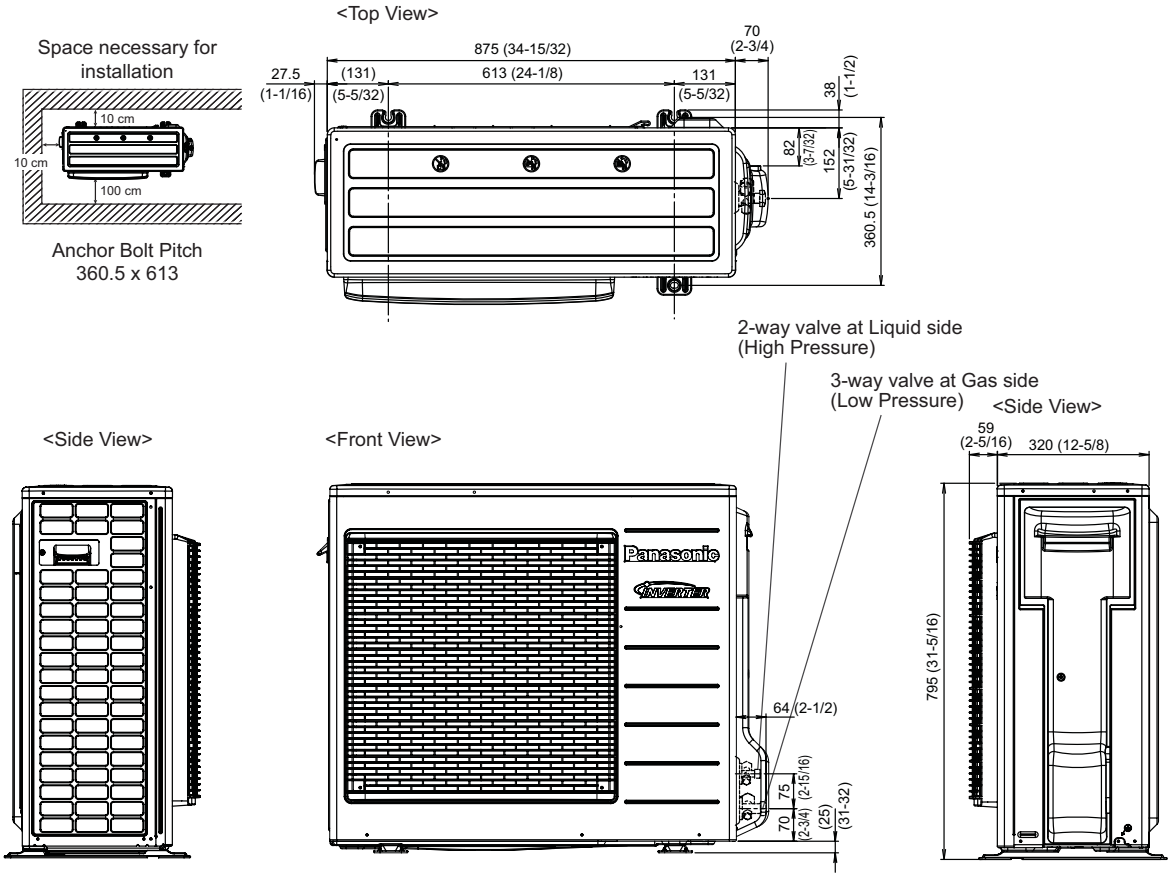

Unit: mm/inch

6. Refrigeration Cycle Diagram

6.1 CS-E9SD3UAW CU-E9SD3UA

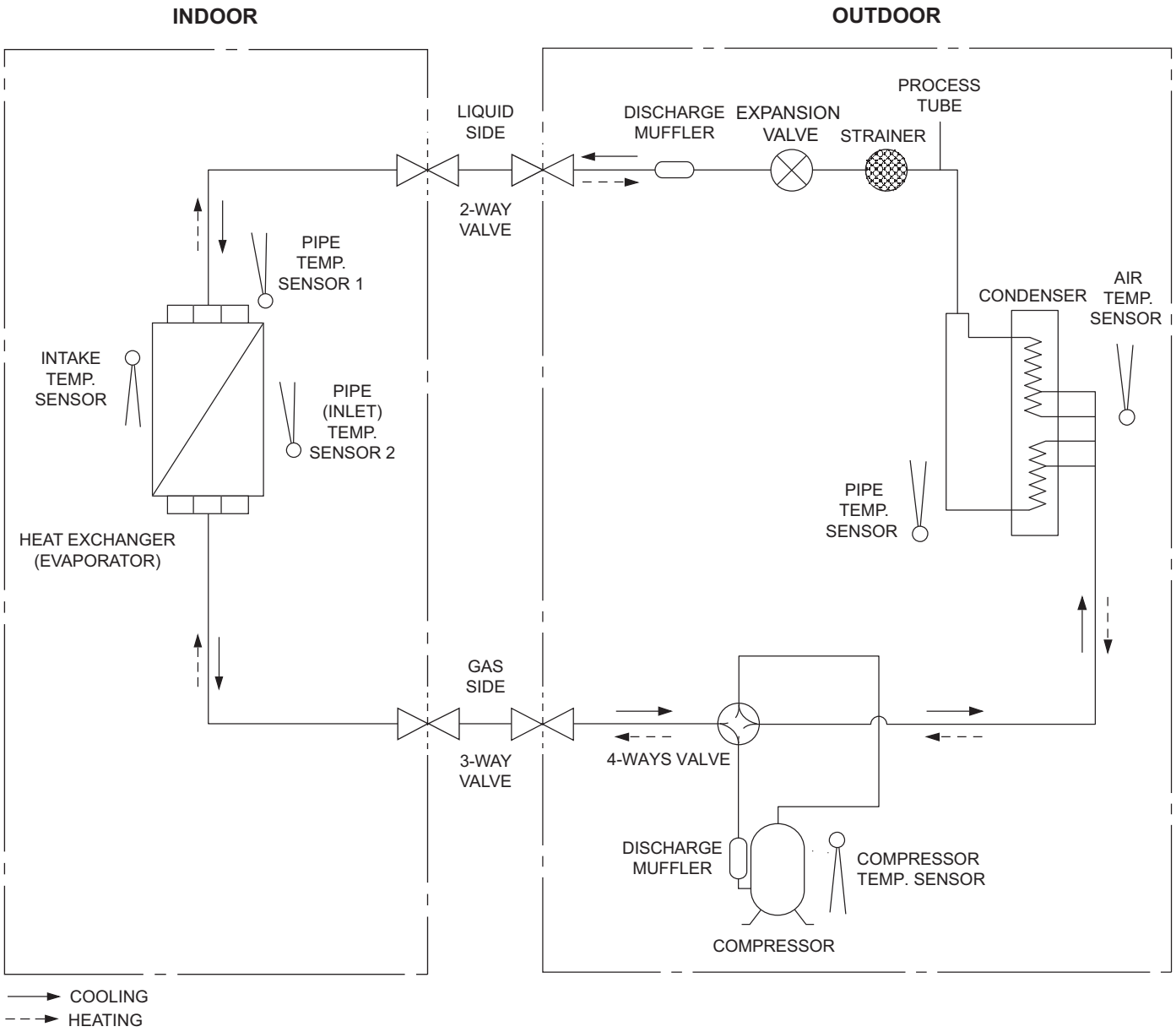

6.2 CS-E12SD3UAW CU-E12SD3UA

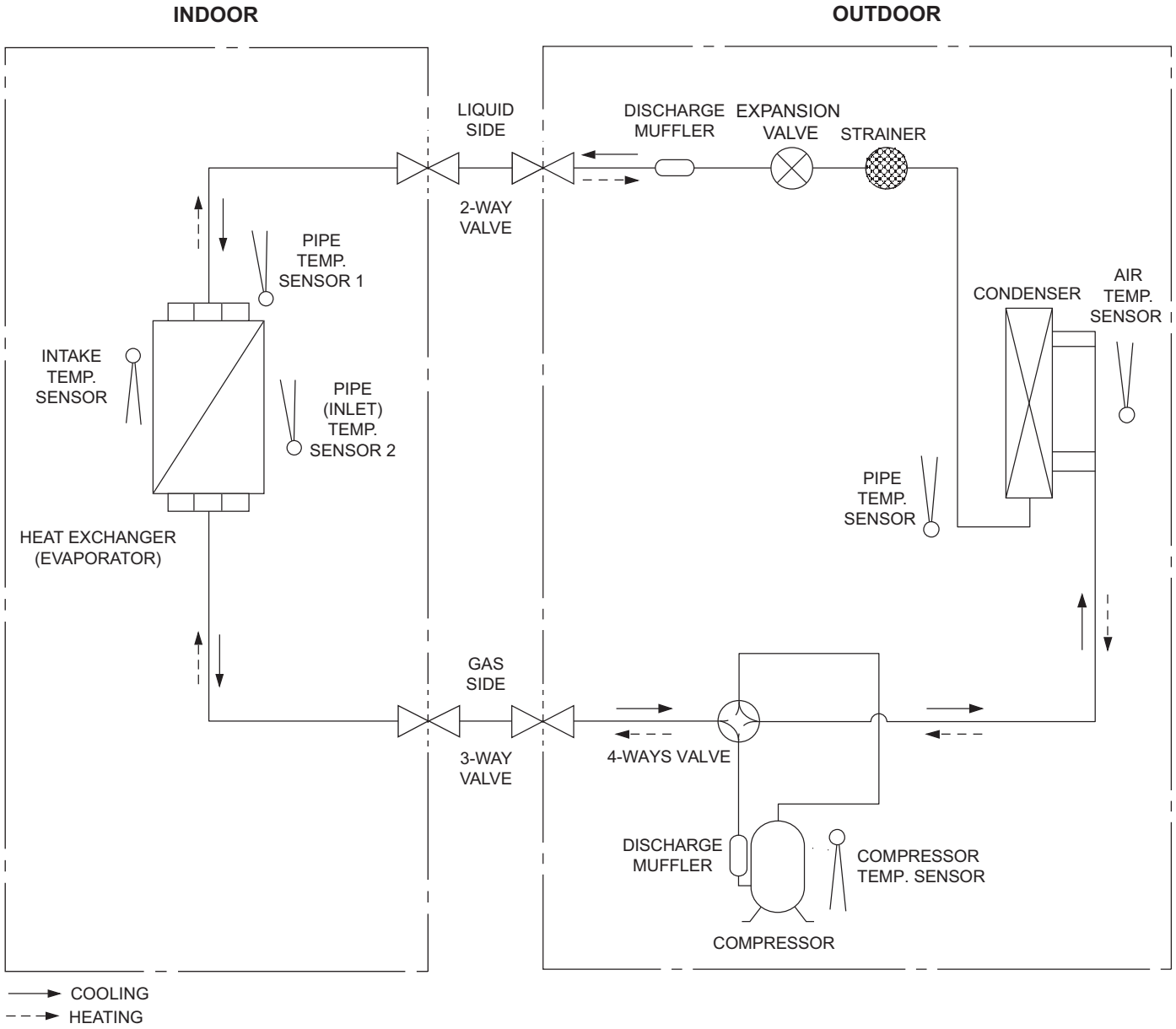

6.3 CS-E18SD3UAW CU-E18SD3UA

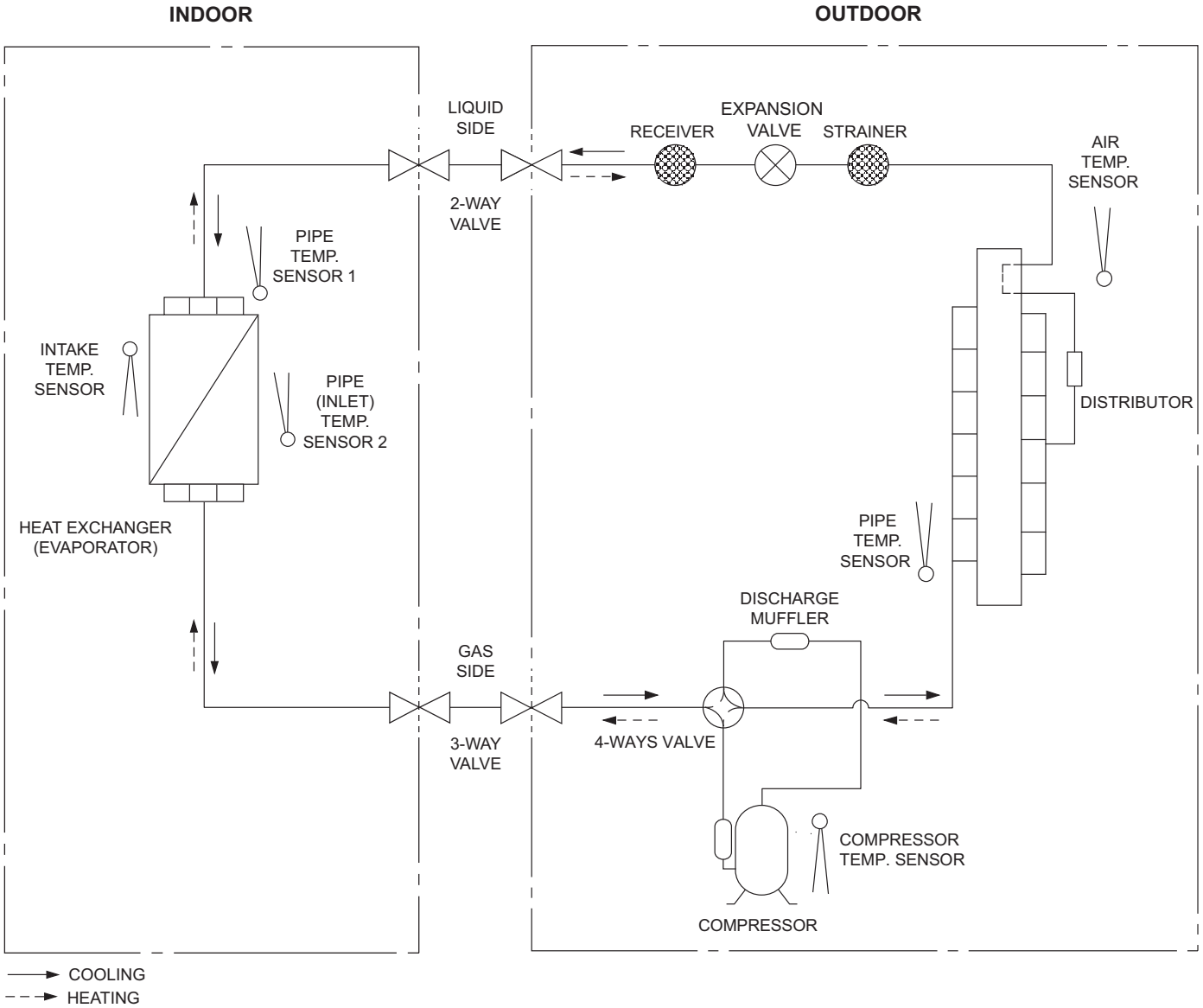

7. Block Diagram

7.1 CS-E9SD3UAW CU-E9SD3UA CS-E12SD3UAW CU-E12SD3UA

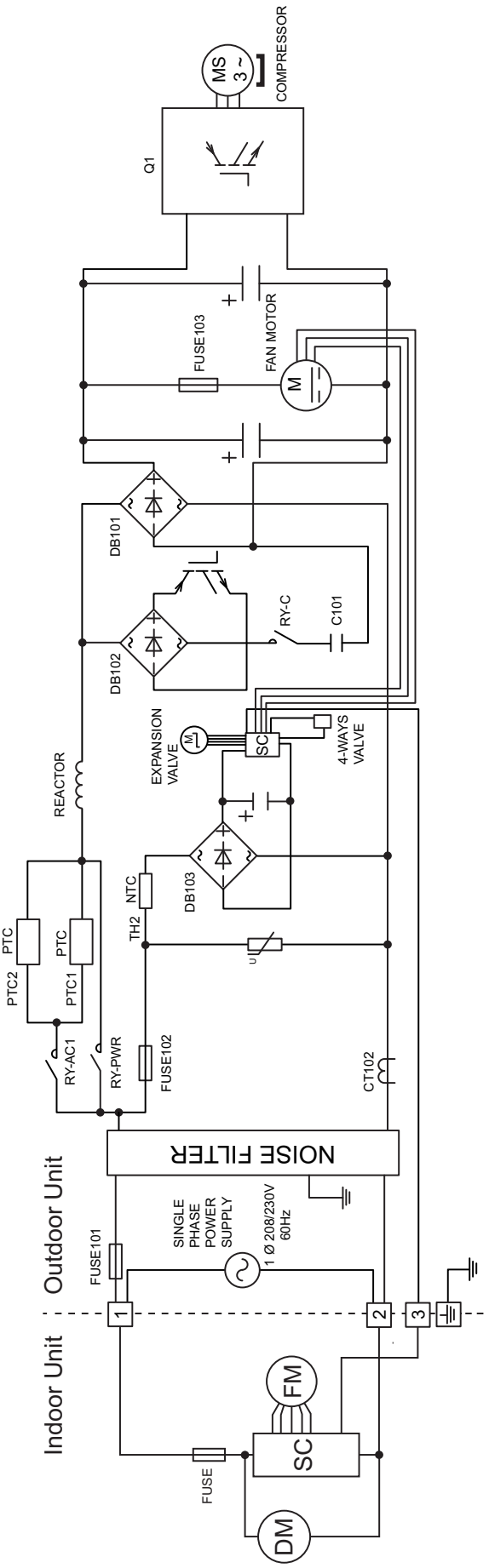

7.2 CS-E18SD3UAW CU-E18SD3UA

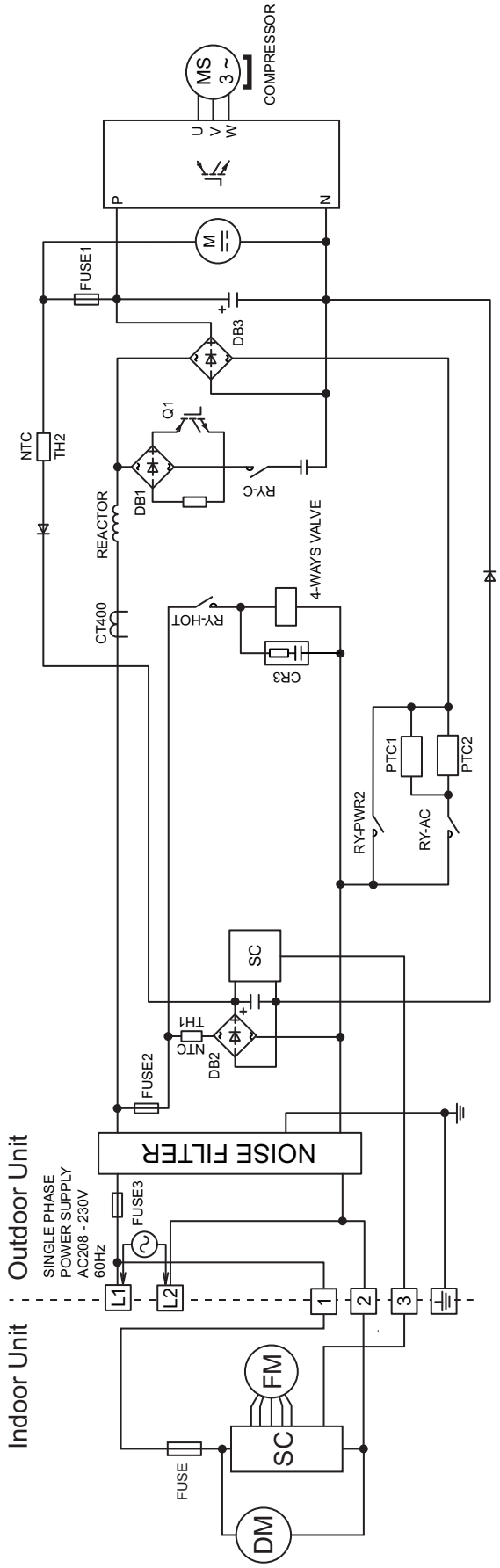

8. Wiring Connection Diagram

8.1 Indoor Unit

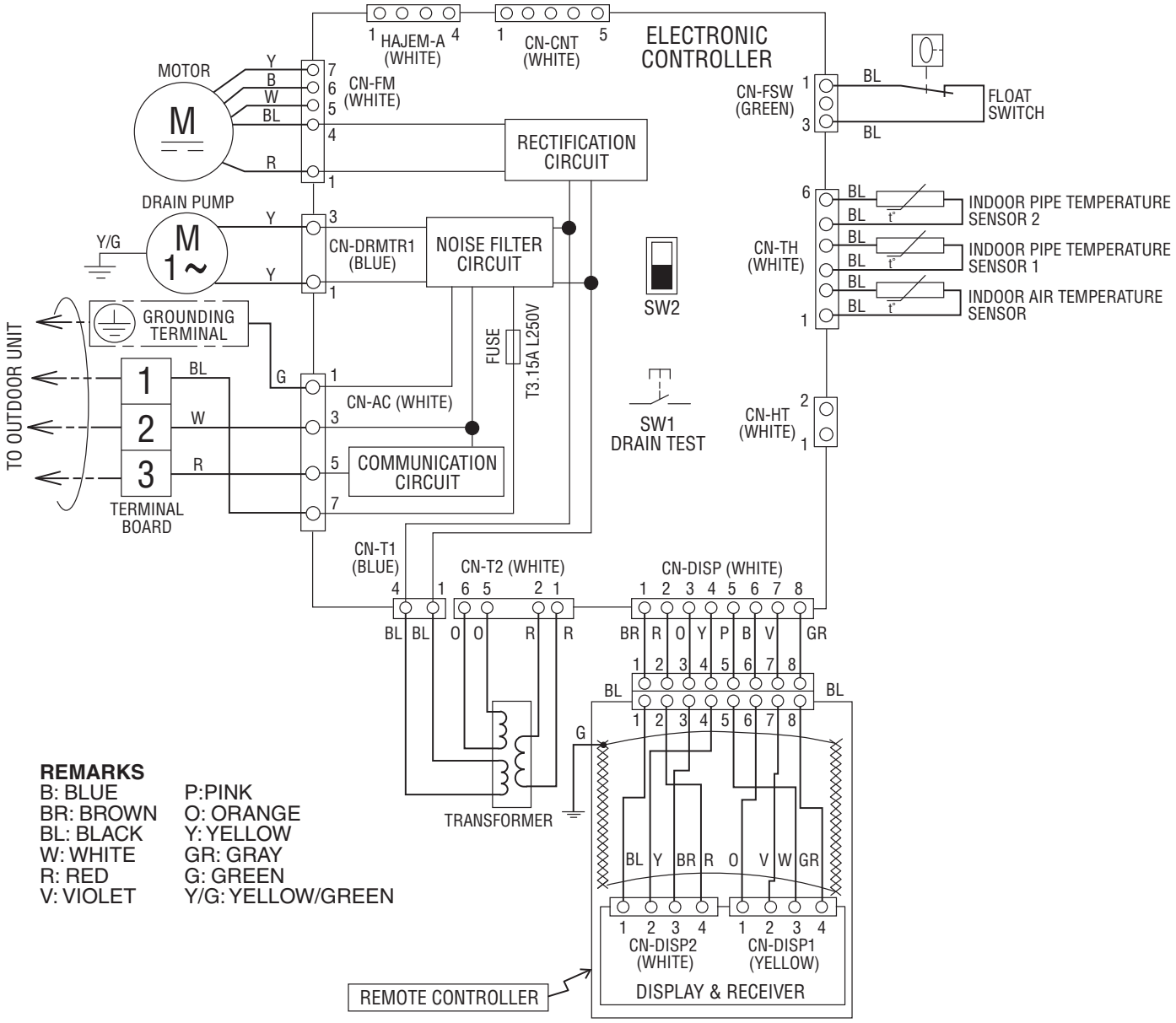

8.2 Outdoor Unit

8.2.1 CU-E9SD3UA CU-E12SD3UA

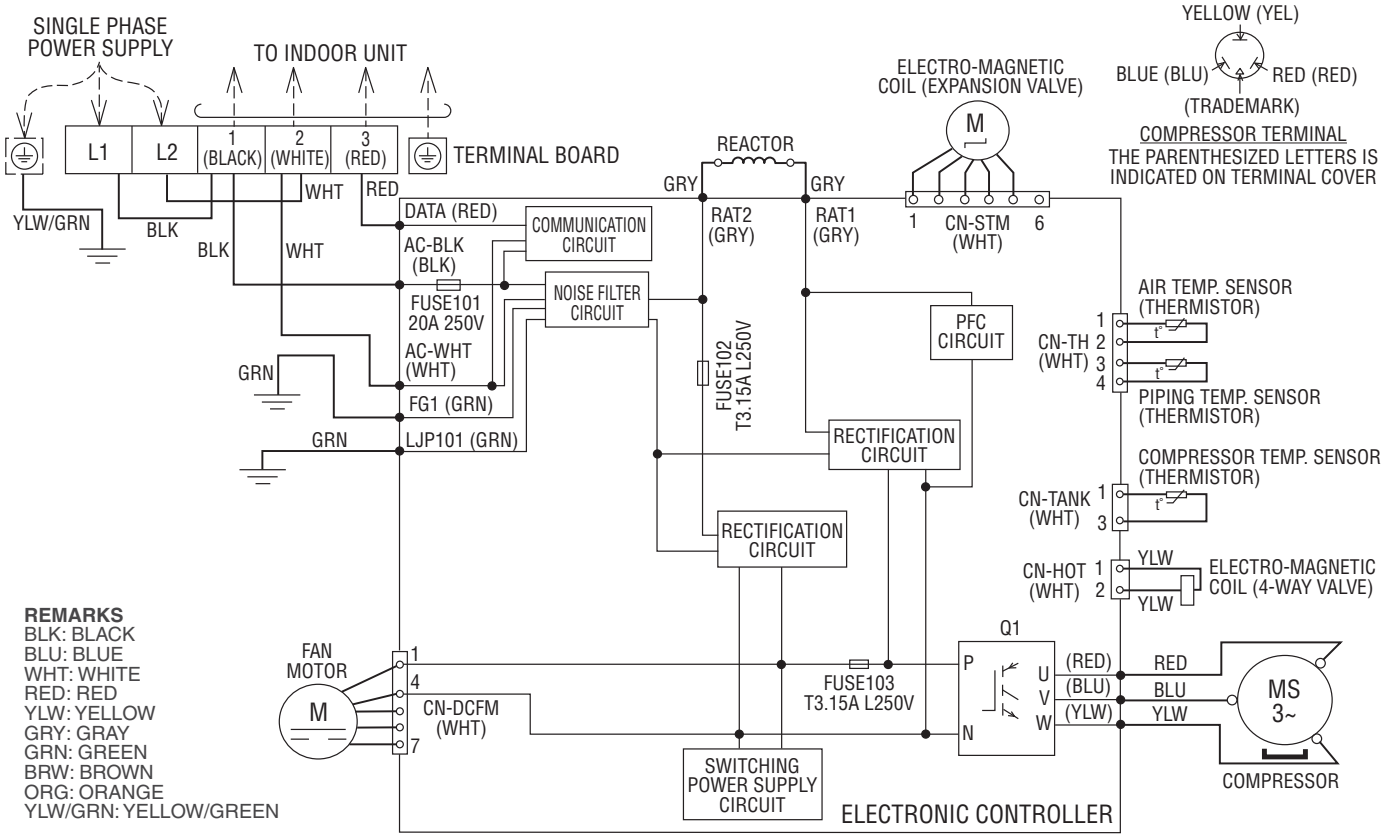

Resistance of Compressor Windings

MODEL	CU-E9SD3UA/CU-E12SD3UA
CONNECTION	5RS102XHA21
U-V	1.741 Ω
U-W	1.765 Ω
V-W	1.711 Ω

Note: Resistance at 68°F of ambient temperature.

8.2.2 CU-E18SD3UA

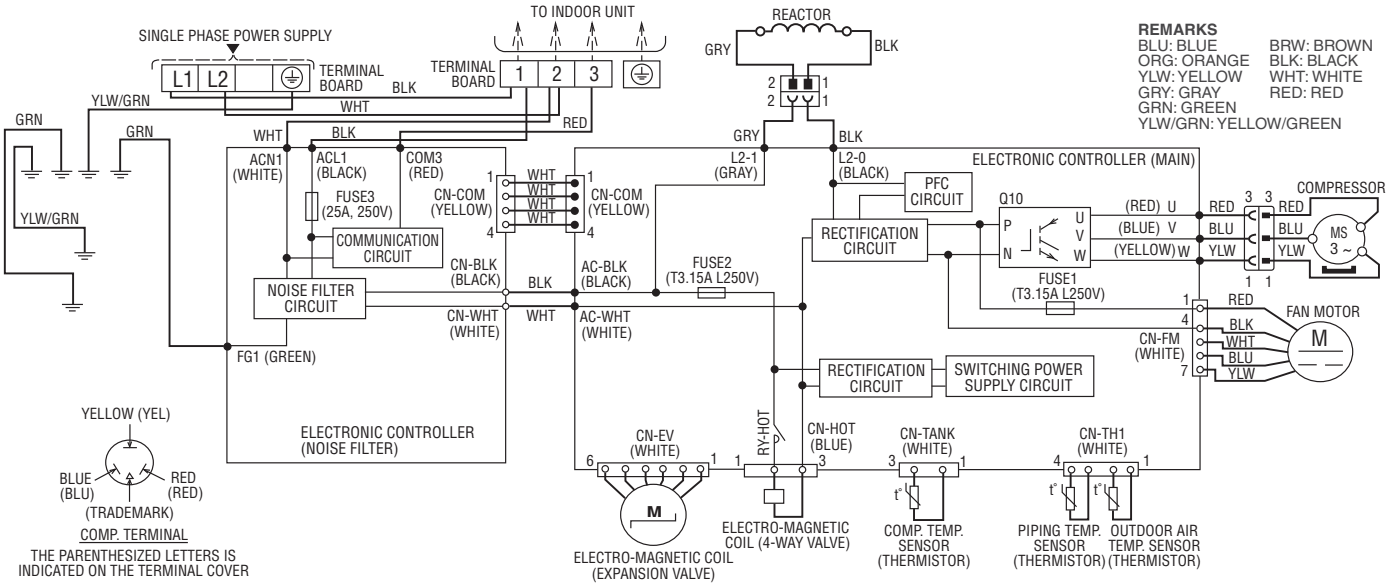

Resistance of Compressor Windings

MODEL	CU-E18SD3UA
CONNECTION	5KD240XAF21
U-V	0.720 Ω
U-W	0.726 Ω
V-W	0.708 Ω

Note: Resistance at 68°F of ambient temperature.

9. Electronic Circuit Diagram

9.1 Indoor Unit

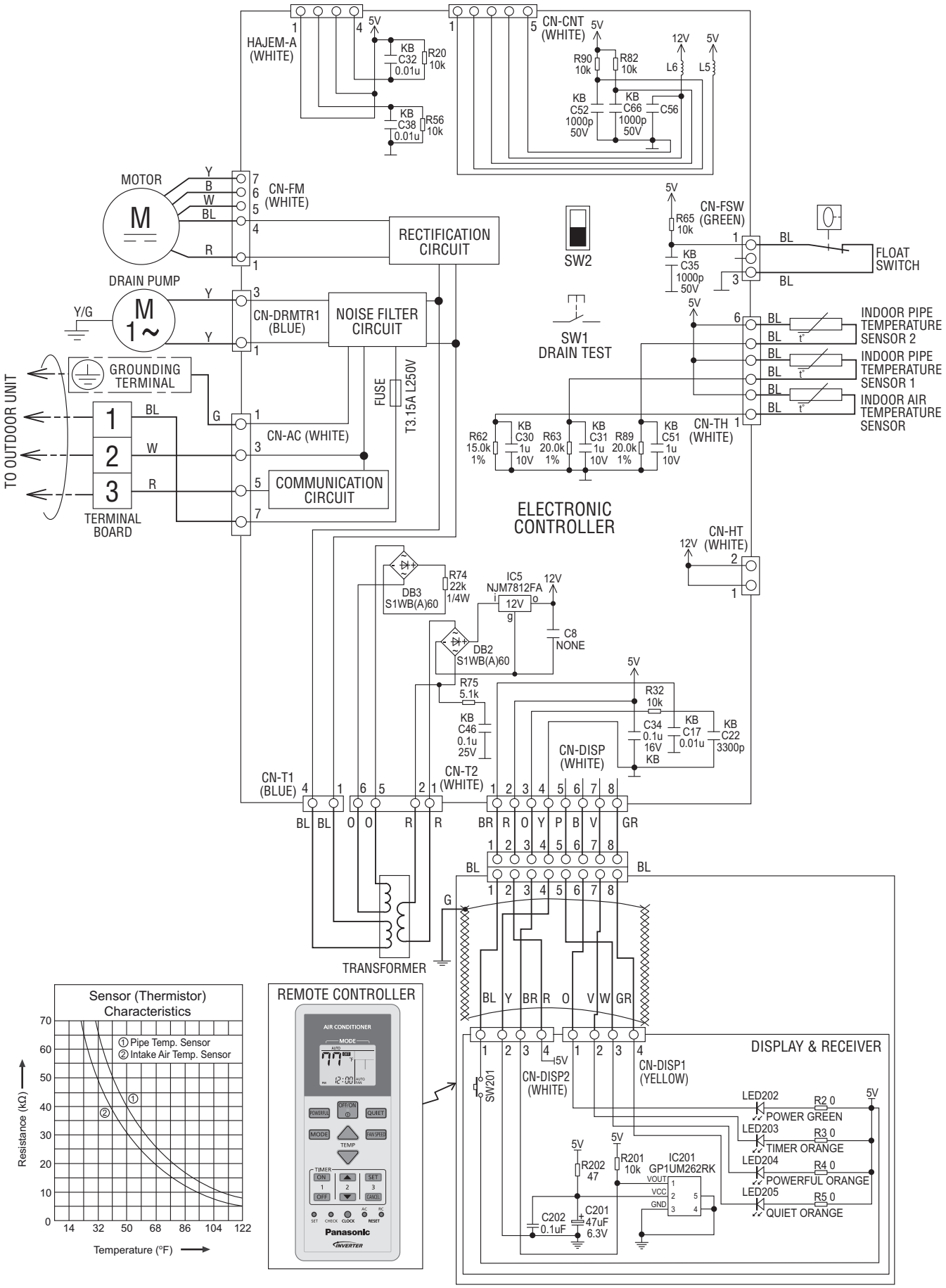

9.2 Outdoor Unit

9.2.1 CU-E9SD3UA CU-E12SD3UA

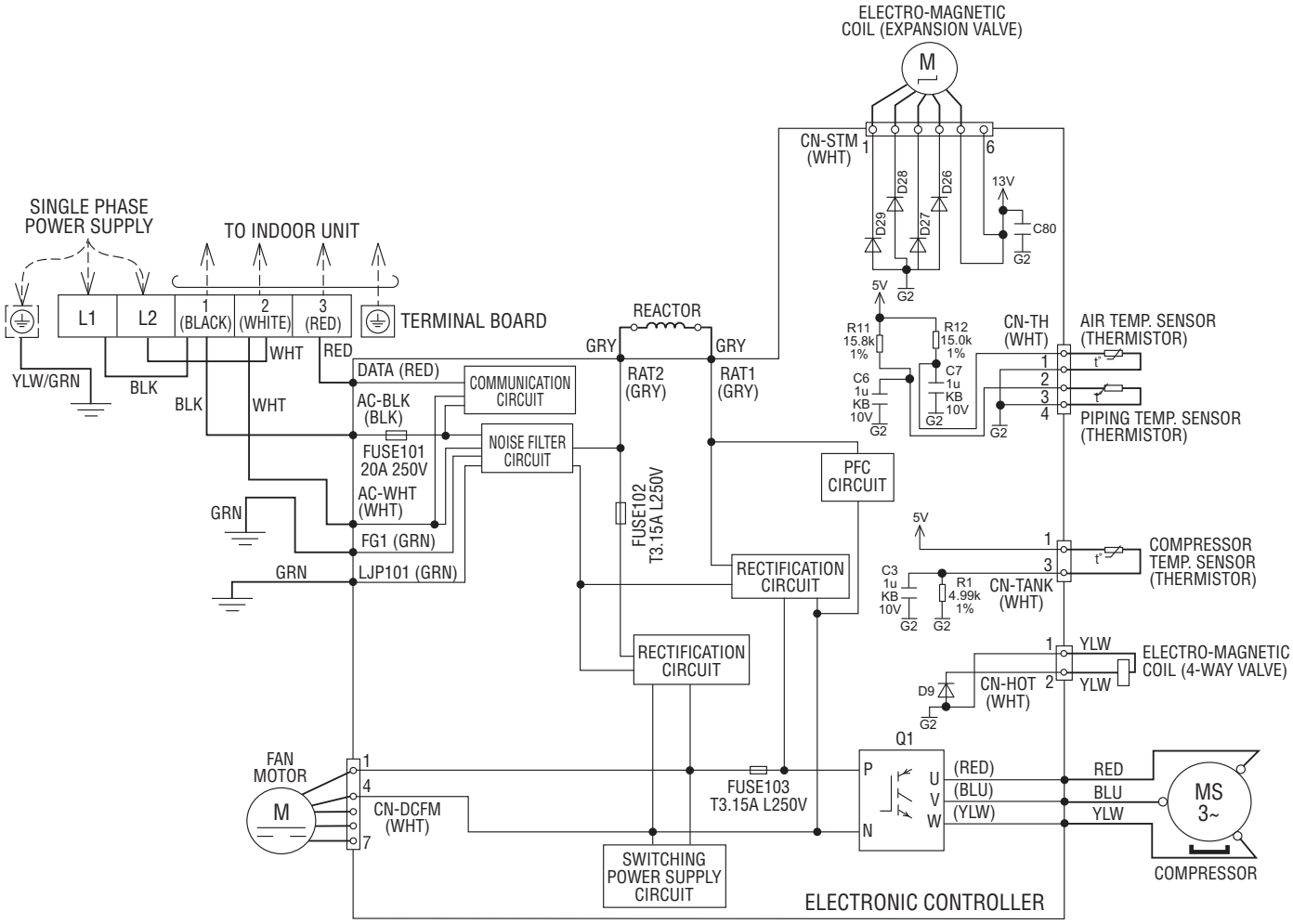

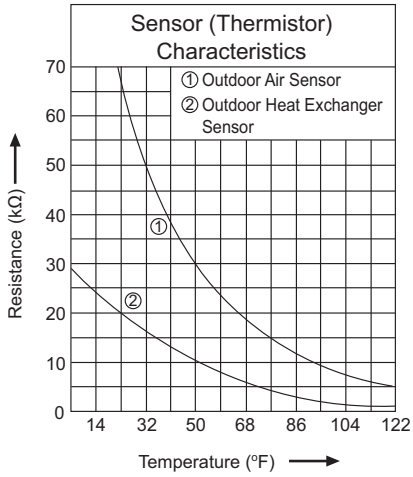

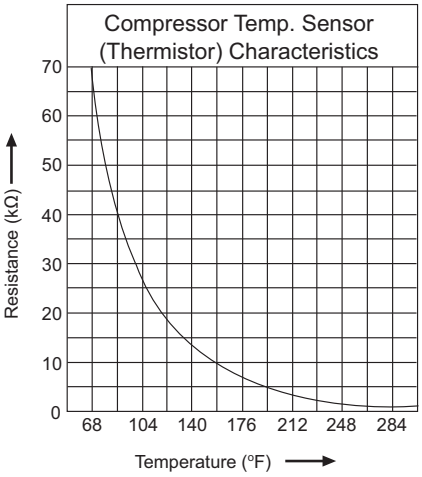

9.2.2 CU-E18SD3UA

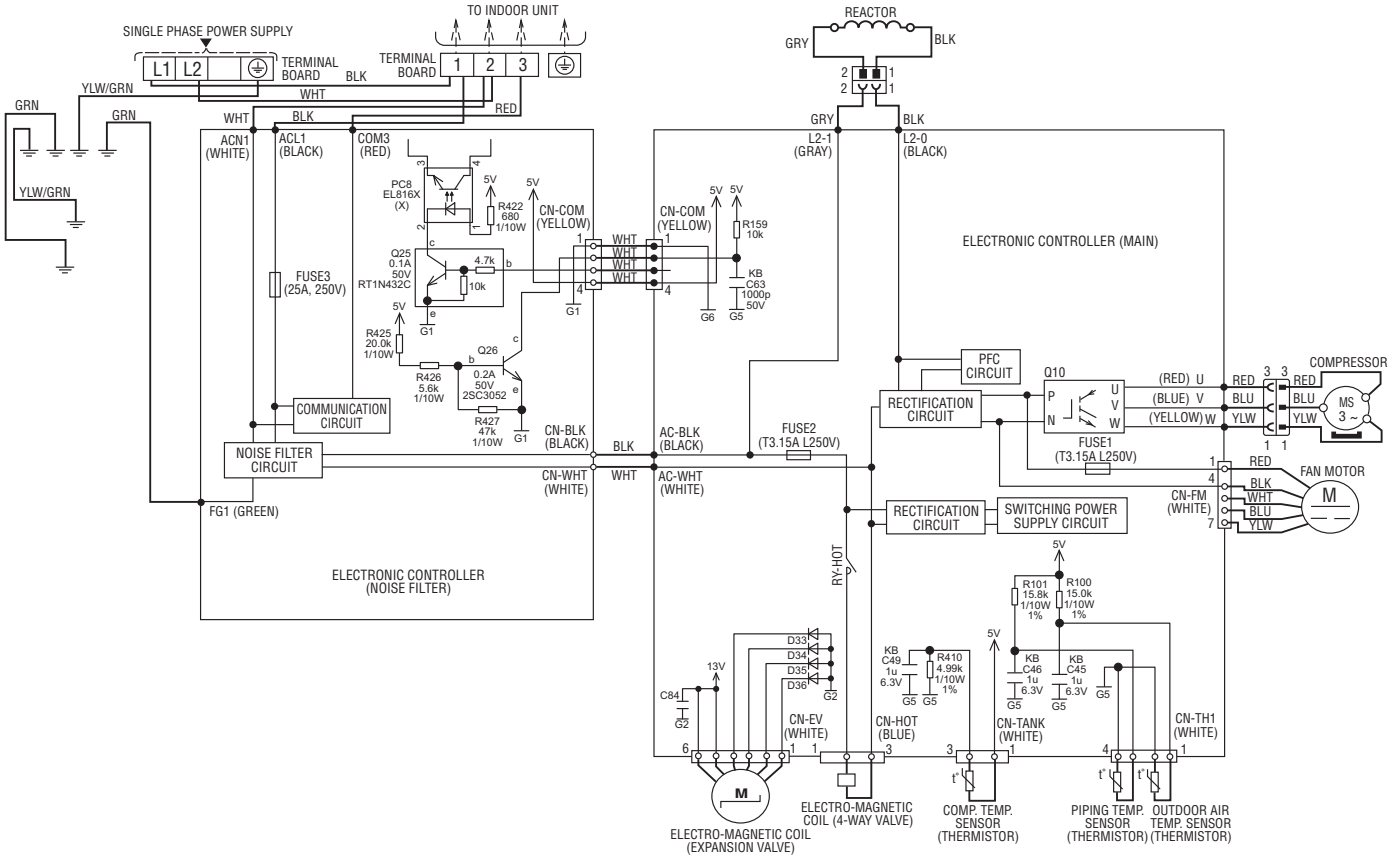

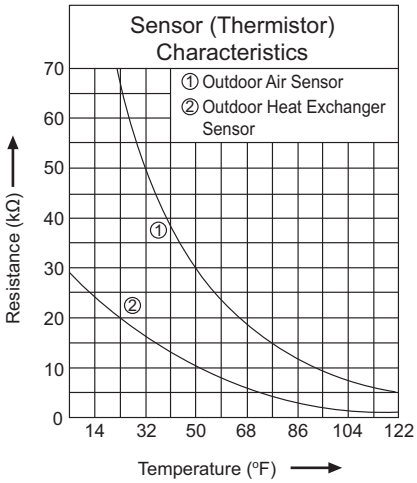

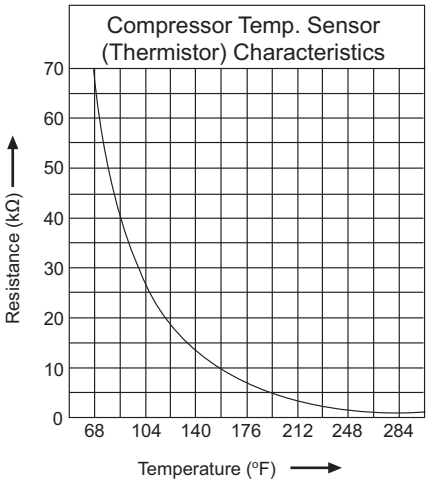

10. Printed Circuit Board

10.1 Indoor Unit

10.1.1 Main Printed Circuit Board

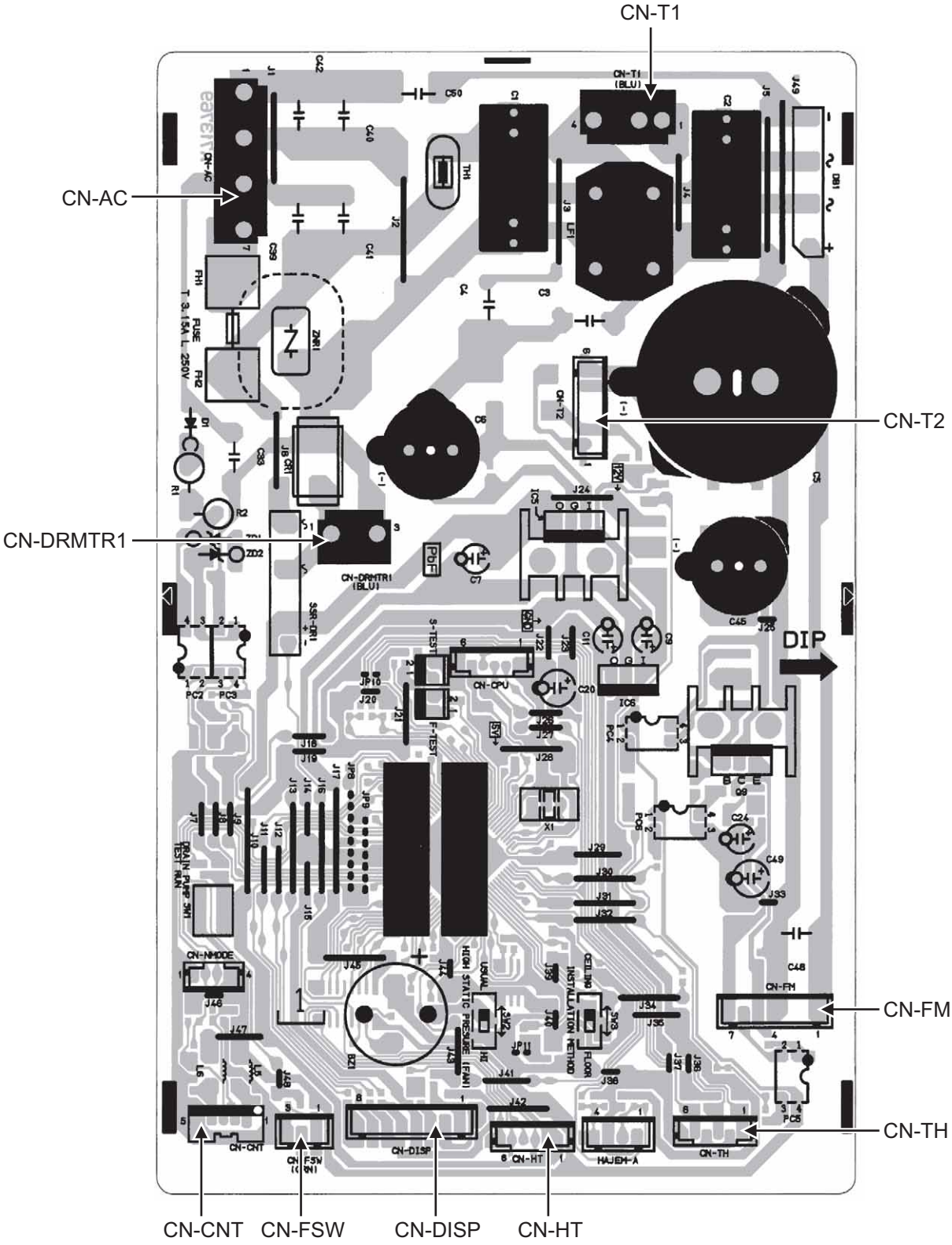

10.2 Outdoor Unit

10.2.1 Main Printed Circuit Board

10.2.1.1 CU-E9SD3UA CU-E12SD3UA

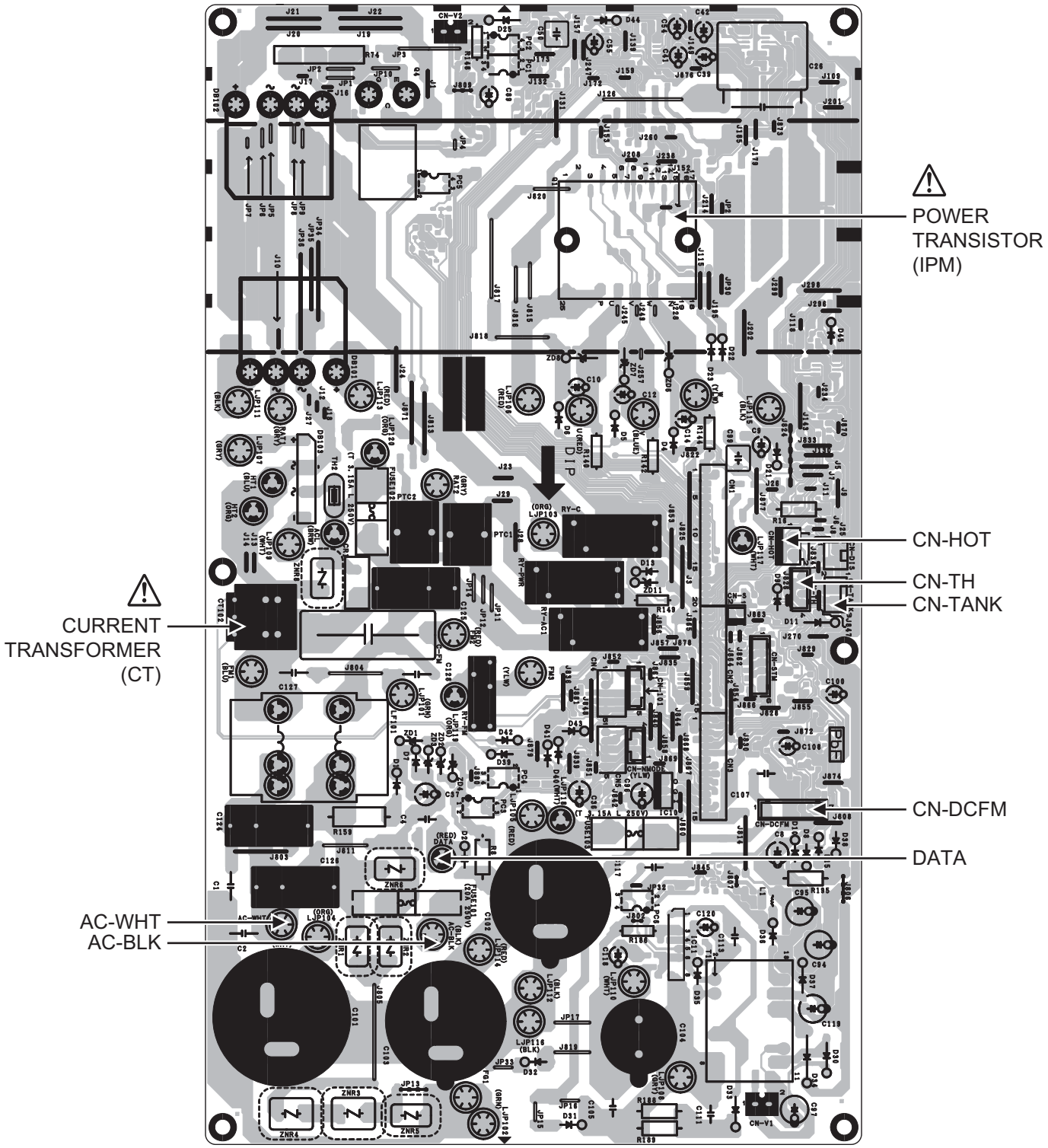

10.2.1.2 CU-E18SD3UA

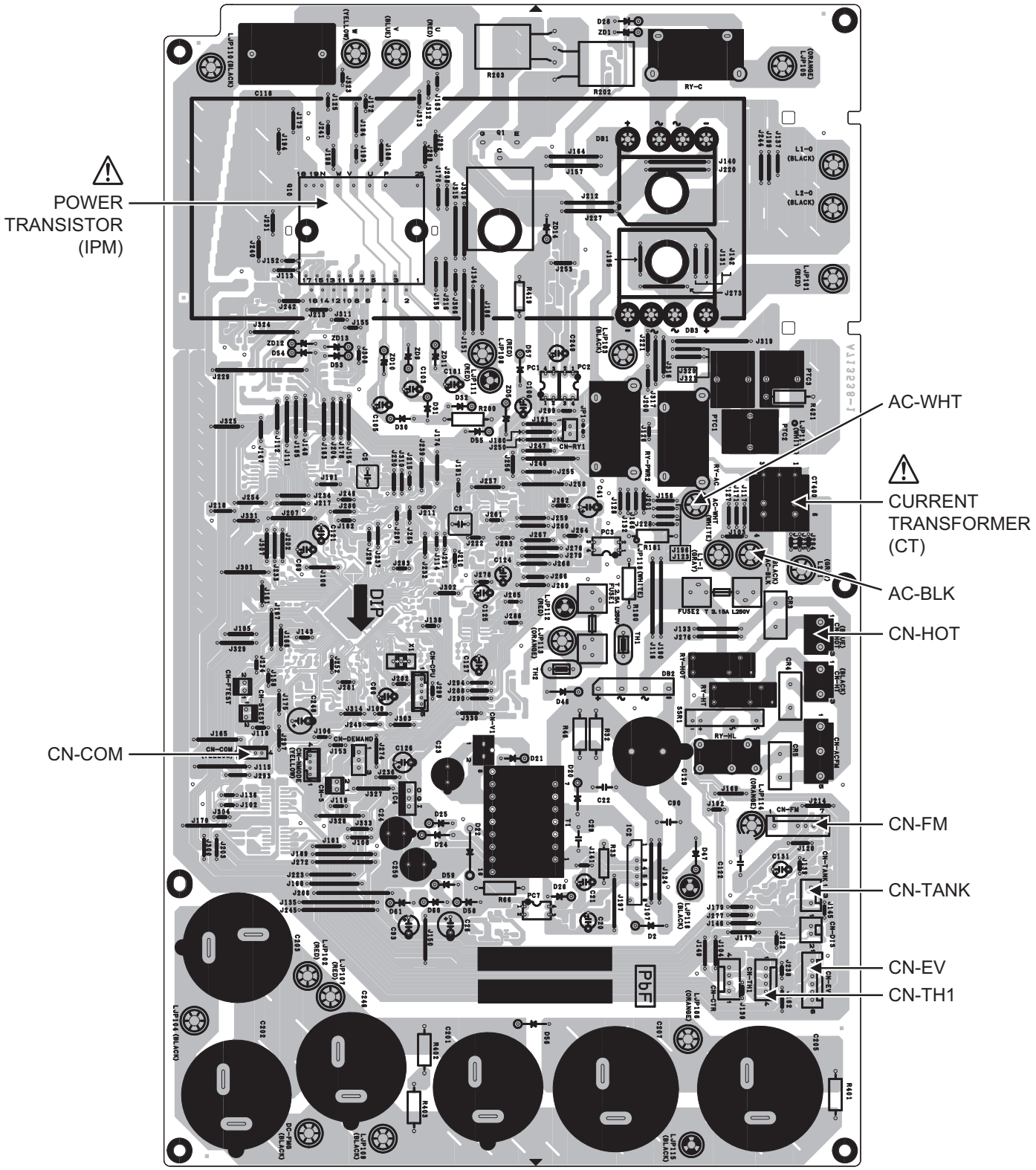

10.2.2 CPU Printed Circuit Board

10.2.2.1 CU-E9SD3UA CU-E12SD3UA

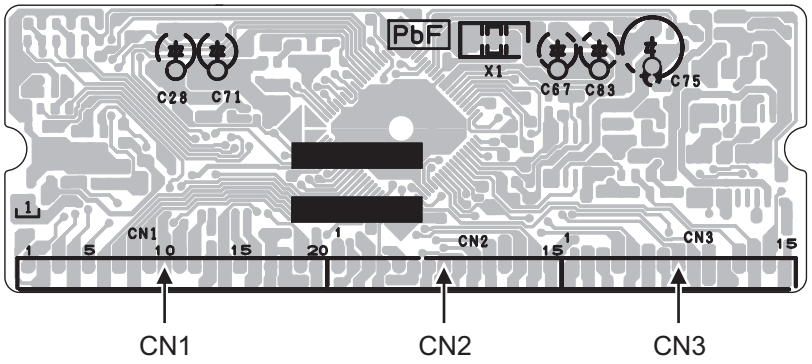

10.2.3 Noise Filter Printed Circuit Board

10.2.3.1 CU-E18SD3UA

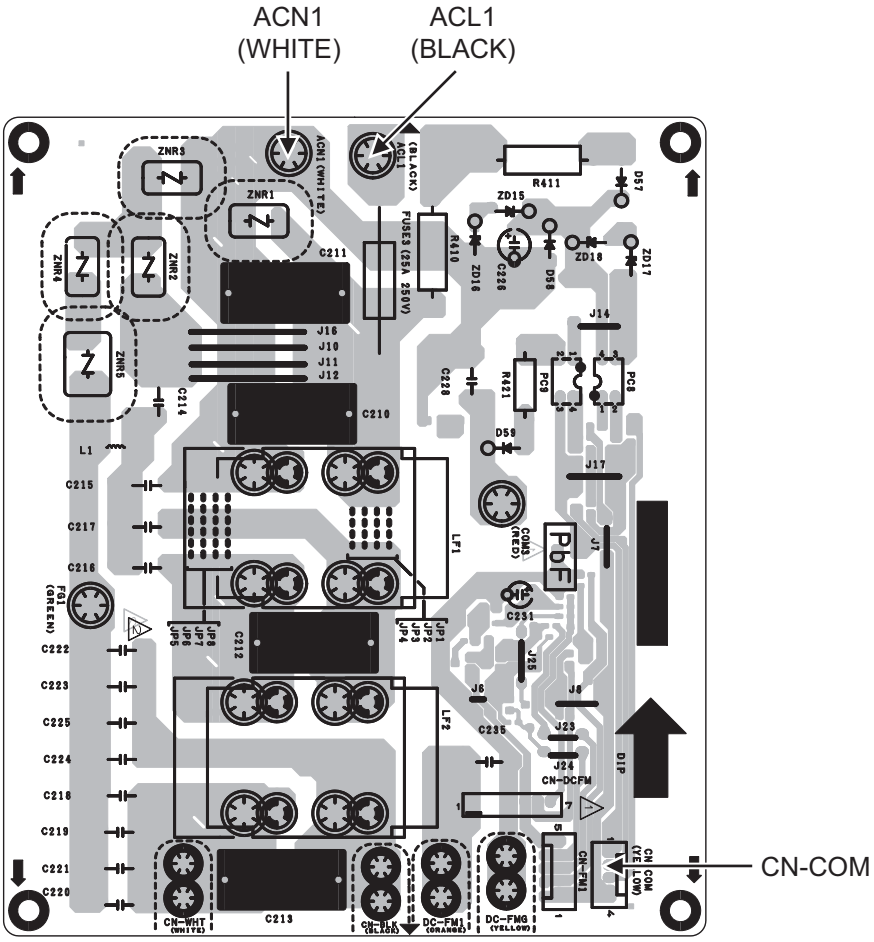

11. Installation Instruction

- **IMPORTANT (ONLY FOR E9SD3UAW AND E12SD3UAW)**
  This product has been designed and manufactured to meet ENERGY STAR® criteria for energy efficiency when matched with appropriate coil components. However, proper refrigerant charge and proper air flow are critical to achive rated capacity and efficiency. Installation of this product should follow the manufacturer's refrigerant charging and air flow instructions. **Failure to confirm proper charge and airflow may reduce energy efficiency and shorten equipment life.**

Attached Accessories

No.	Accessory part	Qty.
1	Remote control	1
2	Battery	2
3	Remote control holder	1
4	Remote control holder fixing screw	2
5	Remote control receiver	1

No.	Accessory part	Qty.
6	Receiver fixing screw (M4 x 39/64" (15.5 mm))	2
7	Clamper (band) (for receiver cable fixing)	1
8	Receiver cable (6.56 ft (2 m))	1
9	Washer (for suspension fitting)	8
10	Flare insulator (for gas pipe / liquid pipe connection)	2

No.	Accessory part	Qty.
11	Clamper (band) (for flare & drain insulating connection)	4
12	Drain hose (for unit & PVC pipe connection) L=131	1
13	Hose band (for drain hose connection)	1
14	Drain hose insulation (for drain pipe connection)	2
15	Clamper (band) (for power supply cord) * Be sure to fix the power supply cord with clamper (band).	1
16	Drain elbow	1

■ Required Materials

- Read the catalog and other technical materials and prepare the required materials.
- Applicable piping kit

Applicable piping kit	Piping size	
	Gas	Liquid
CZ-3F5, 7BP	3/8" (9.52 mm)	1/4" (6.35 mm)
CZ-4F5, 7, 10BP	1/2" (12.7 mm)	1/4" (6.35 mm)
CZ-52F5, 7, 10BP	5/8" (15.88 mm)	1/4" (6.35 mm)

- Pipe size reducer (CZ-MA1P) for outdoor Multi connection CS-E12SD3UAW, CS-E18SD3UAW

■ Other Items to be Prepared (Locally Purchased)

Product name	Remarks
Rigid PVC pipe	VP20 (outer diameter ø1 1/32" (ø26); also sockets, elbows and other parts as necessary
Adhesive	PVC adhesive
Insulation	For refrigerant piping insulation: foamed polyethylene with a thickness of 5/16" (8 mm) or more. For drain piping insulation: foamed polyethylene with a thickness of 13/32" (10 mm) or more.
Indoor/outdoor connecting cable	UL listed or CSA approved 4 conductor wires minimum AWG16
Hanging bolt related parts	Hanging bolts (M10) (4) and nuts (12), (when hanging the indoor unit)

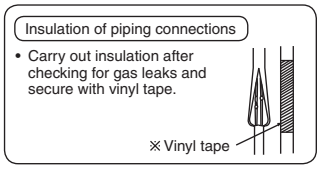

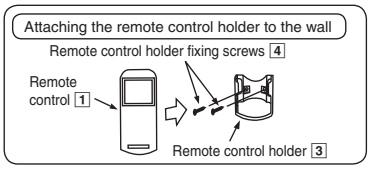

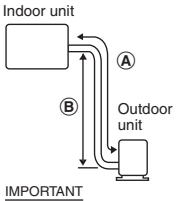

IMPORTANT
Begin the installation job from the "Indoor Unit" installation.

Model	Capacity (Btu/h)	Piping size		Std. Length	Max Elevation	Min. Piping Length	Max. Piping Length	Additional Refrigerant	Piping Length for add. gas
		Gas	Liquid						
E9SD3UAW	9000	3/8" (9.52 mm)	1/4" (6.35 mm)	24.6 ft (7.5 m)	49.2 ft (15 m)	9.8 ft (3 m)	65.6 ft (20 m)	0.2 oz/ft (20 g/m)	24.6 ft (7.5 m)
E12SD3UAW	11500	1/2" (12.7 mm)							
E18SD3UAW	17200	1/2" (12.7 mm)					100.0 ft (30.5 m)	0.3 oz/ft (25 g/m)	32.8 ft (10 m)

Example: For E9SD3UAW
If the unit is installed at 32.8 ft (10 m) distance, the quantity of additional refrigerant should be 1.64 oz (50 g) …. (32.8 - 24.6) ft x 0.2 oz/ft = 1.64 oz.
((10 - 7.5) m x 20 g/m = 50 g).

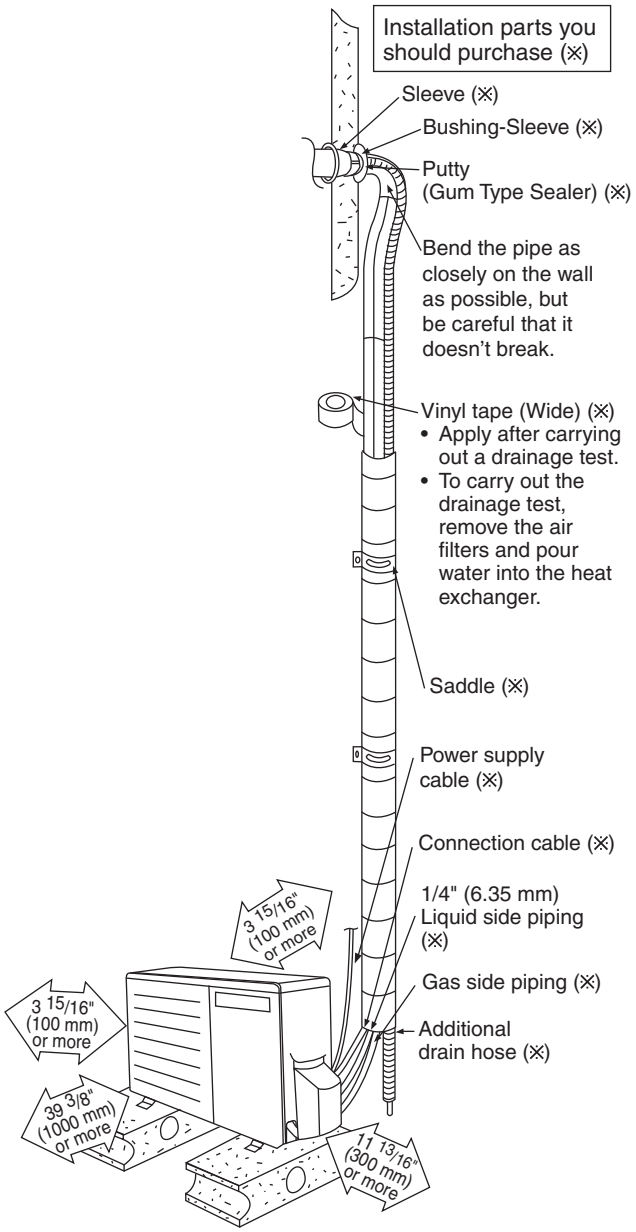

It is advisable to avoid more than 2 blockage directions. For better ventilation & multiple-outdoor installation, please consult authorized dealer/specialist.

Or

- This illustration is for explanation purposes only. The indoor unit will actually face a different way.

11.1 Indoor Unit

11.1.1 Selecting the Installation Location

Take into consideration the following contents when creating the blueprint.

■ **Indoor unit installation location**

- Do not install the unit in excessive oil fume area such as kitchen, workshop and etc.
- The location should be strong enough to support the main unit without vibration.
- There should not be any heat or steam source nearby.
- Drainage should be easy. Avoid locating the drain port close to ditches (domestic wastewater).
- Avoid locations above entrances and exits.
- Do not block the air intake and discharge passages.
- Select the location that enables the cool and warm air to spread out to the entire room.
- Locate the indoor unit at least 3.28 ft (1 m) or more away from a TV, radio, wireless appliance, antenna cable and fluorescent light, and 6.56 ft (2 m) or more away from a telephone.
- Recommended installation height for indoor unit shall be at least 8.27 ft (2.5 m) from floor.

11.1.2 To Drill a Hole in the Wall and Install a Sleeve of Piping

1. Insert the piping sleeve to the hole.
2. Fix the bushing to the sleeve.
3. Cut the sleeve until it extrudes about 19/32" (15 mm) from the wall.

⚠ CAUTION
When the wall is hollow, be sure to use the sleeve for tube assembly to prevent pests from damaging the cables, e.g. mice biting the connection cable.

4. Finish by sealing the sleeve with putty or caulking compound at the final stage.

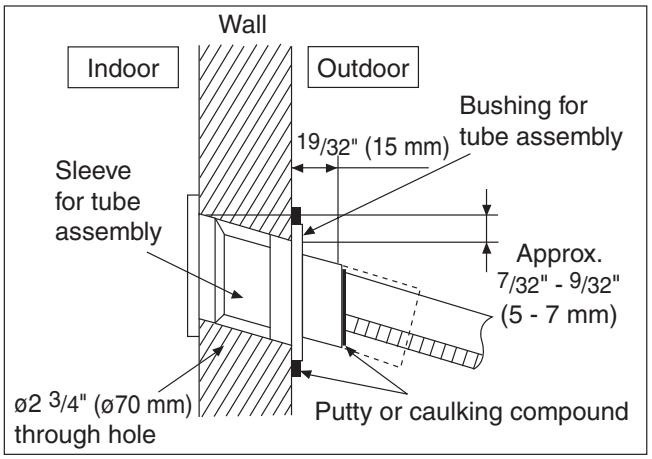

11.1.3 Installing the Indoor Unit (Installation Embedded in the Ceiling)

11.1.3.1 Preparation Before Installation

- Always provide sufficient entry and exit space to allow installation work, inspection and unit replacement.
- Waterproof the rear surface of the ceiling below the unit in consideration of water droplets forming and dropping.

⚠ CAUTION
When cooling operation is performed for an extended period under the following conditions, water droplets may form and drop. Attach locally purchased insulation (foamed polyethylene with a thickness of 7/32" (5 mm) or more) to the outside of the indoor unit before installing into the ceiling to improve heat insulation. • Locations with a dew point inside the ceiling of 73.4°F (23°C) or more • Kitchens and other locations that produce large amounts of heat and steam • Locations where the inside of the ceiling serves as an outside air intake passage

- **When installing into a ceiling, select the unit position and airflow direction that enable the cool and warm air to spread out to the whole room.**
- **Do not place objects that might obstruct the airflow within 3.28 ft (1 m) below the intake grill.**

Required Minimum Space for Installation and Service

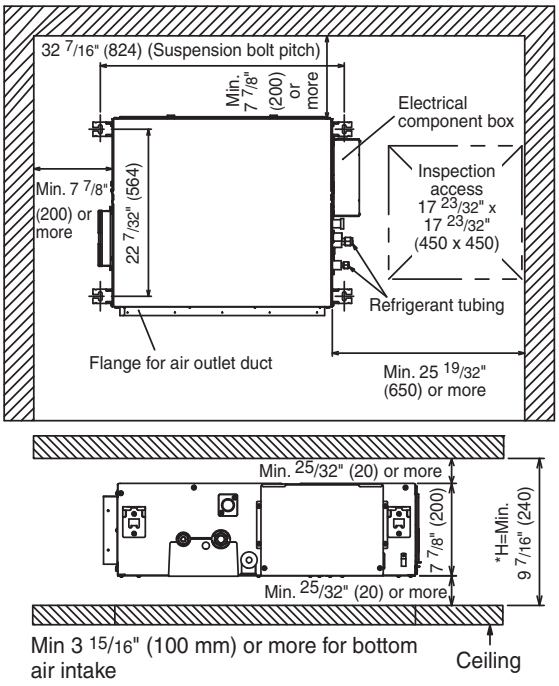

- H dimension means the minimum height of the unit installation space.
- Select H dimension such that a downward slope of at least 1/100 is ensured. Refer to 11.1.4 “Connecting the drain piping”

Dimension of the Indoor Unit

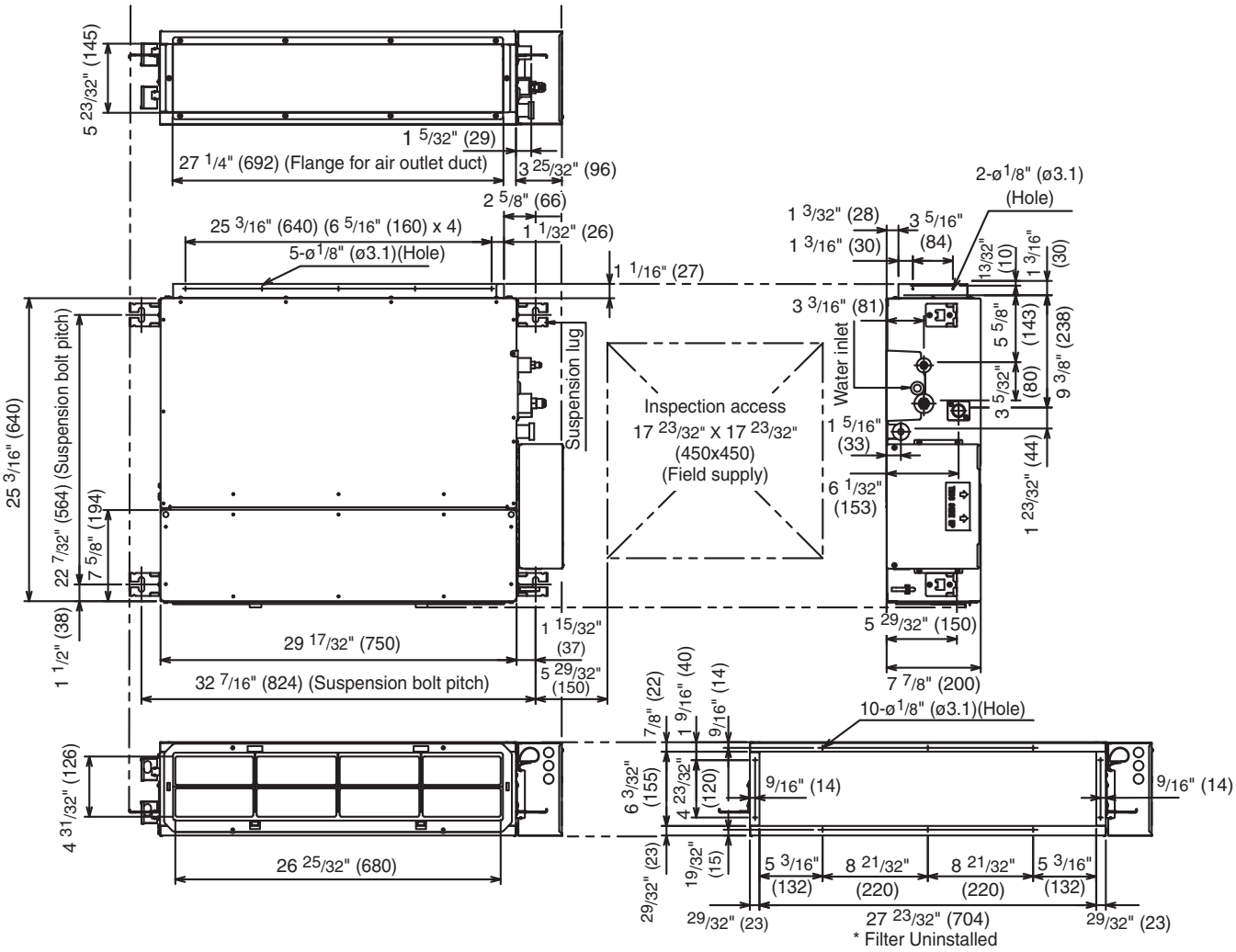

In Case of Bottom Intake

1 Remove the frame filter assy as shown in diagram ①
2 Remove cover plate as shown in diagram ①
3 Fix frame filter assy as shown in diagram ②
4 Fix cover plate as shown in diagram ② with the dummy hole downward.

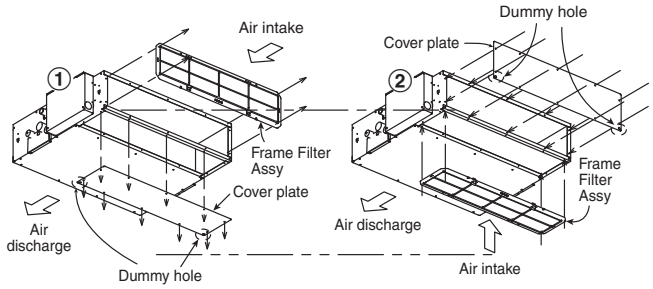

Fixing Frame Filter Assy

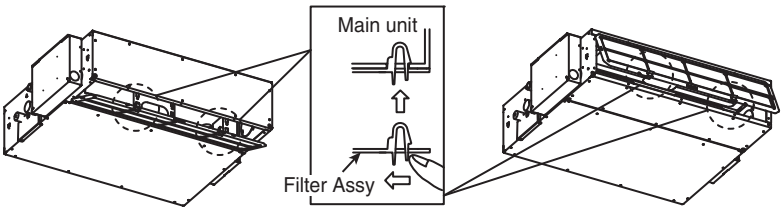

In case of bottom side

* Attach the frame filter assy to the main unit while pushing the tip of the latches in the direction of the arrow.

In case of back side

Ceiling Opening

- Install inspection opening 17 23/32" x 17 23/32" (450 mm x 450 mm) on the control box side where maintenance and inspection of the control box and drain pump are easy. Install another inspection opening 31 1/2" x 27 9/16" (800 mm x 700 mm) also at the lower part of the unit.

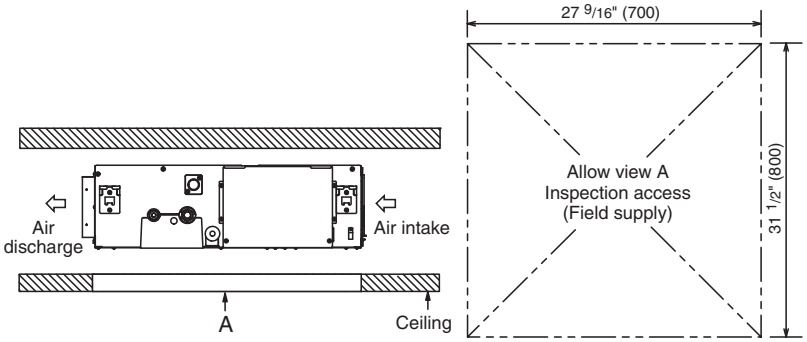

Securing the Hanging Bolts

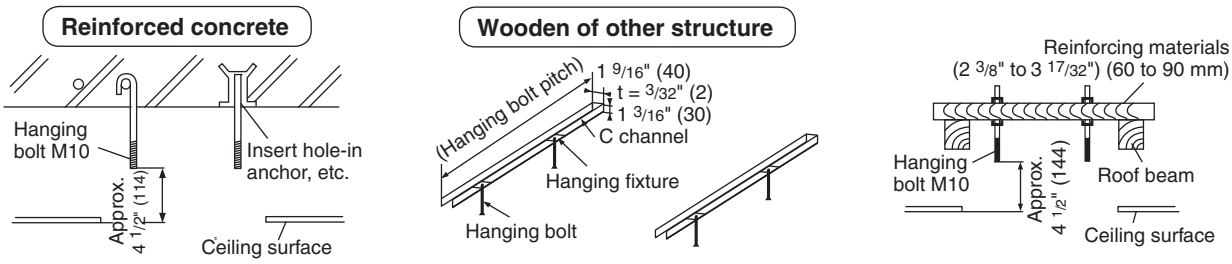

- Secure the hanging bolts (M10, locally purchased) firmly in a manner capable of supporting the unit weight.
- Consult your construction or interior contractor for details on finishing the ceiling opening.

Installing an Intake and Discharge Duct Type

- Ensure the range of unit external static pressure is not exceeded. Refer technical manual for the range of external static pressure setting.
- Connect the duct as shown.
- When attaching duct to the intake side, remove the product filter frame assy and replace with locally purchase intake-side flange by using flange by using 10 - Ø 1/8" (Ø 3.1)(hole) screws.
- Wrap the flange and duct connection area with aluminium tape or similar to prevent air leak.

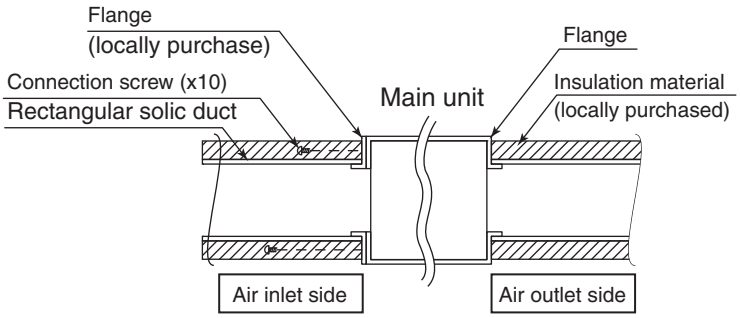

⚠ CAUTION

When attaching a duct to the intake-side, be sure to attach an air filter inside the air passage on the intake-side.
(Use an air filter with dust collecting efficiency at least 50% in a gravimetric technique.)

Installation into the Ceiling

- Attach the nuts and washers to the hanging bolts, then lift up and hook the main unit onto the hanging fixtures.
- Check if the unit is leveled using a level or a vinyl hose filled partially with water.

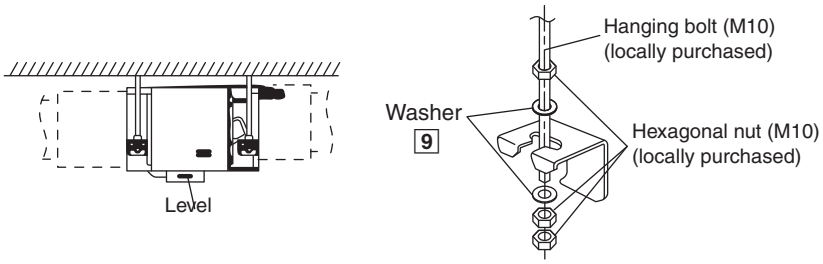

Mounting Remote Controller Receiver

⚠ CAUTION

Install the remote controller receiver cable at least 1 31/32" (50 mm) away from electric wires of other appliances to avoid miss-operation (electromagnetic noise).

1 Remove the bottom case.

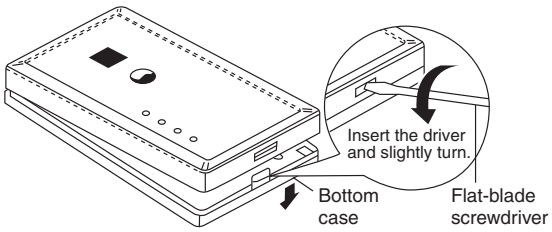

Attention

Mounting the bottom case

- Tighten the screws securely until the screw heads touch the bottom case. (Otherwise, loose screw heads may hit the PCB and cause malfunction when mounting the top case.)
- Do not over-tighten the screws. (The bottom case may be deformed, resulting in fall of the unit.)

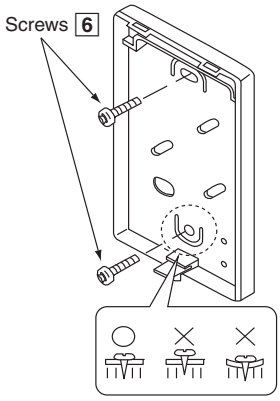

Connecting the remote control wiring

- Arrange the wires as shown in the illustration for ❷ as in diagram below, avoiding unnecessary wires being stored in the case. (Caught wires may destroy the PCB.)
- Avoid wires touching parts on the PCB. (Caught wires may destroy the PCB.)

2 Mount to the wall.

EXPOSED TYPE

Preparation: Make 2 holes for screws using a driver.

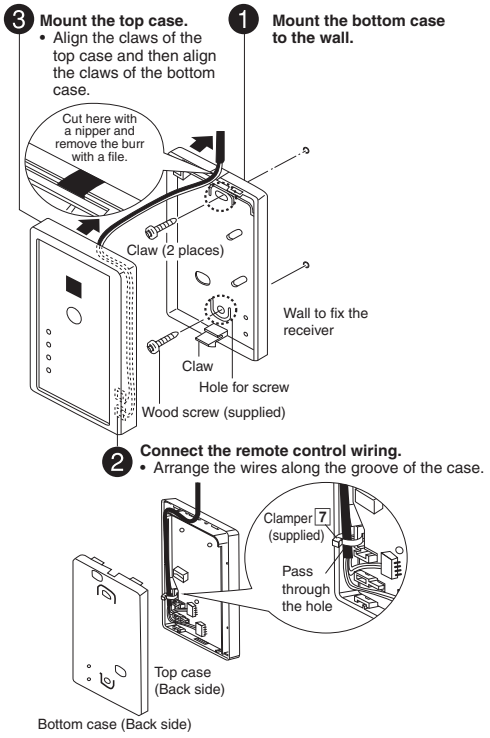

EMBEDDED TYPE

Preparation: Make 2 holes for screws using a driver.

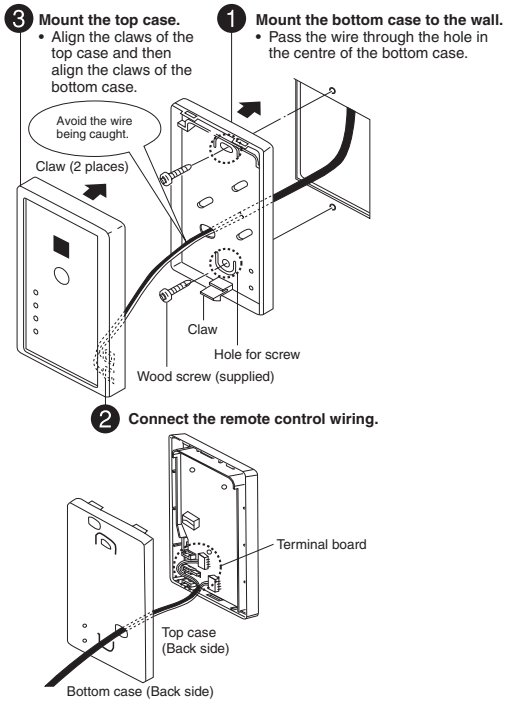

- Connect the indoor unit and the remote control receiver 5. (Refer to the illustration.)
- Fix the green wire from receiver cable 8 to the grounding location provided inside control board.

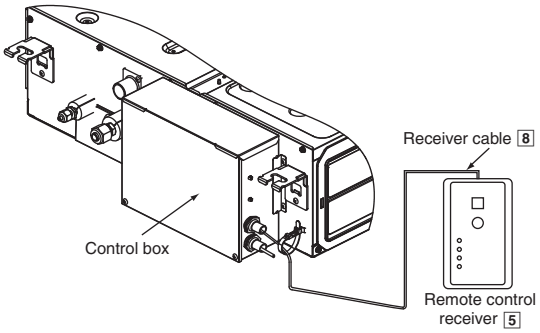

11.1.4 Connecting the Drain Piping

- Lay the drain piping so as to ensure drainage.
- Use a locally purchased VP20 general rigid PVC pipe (outer diameter ø1 1/32" (ø26)) for the drain piping **and firmly connect the indoor unit and the drain piping using supplied hose band to ensure that no leakage occurs.**
- Drain piping located indoor should always be insulated by wrapping with locally purchased insulation (foamed polyethylene with a thickness of 13/32" (10 mm) or more).
- The drain piping should have a downward gradient (1/100 or more) and should be secured by using pipe hanging equipment to avoid creating hills or traps partway.
- Should there be any obstacle preventing the drain piping from being extended smoothly, the drain piping can be raised outside of the main unit as shown in the illustration below.

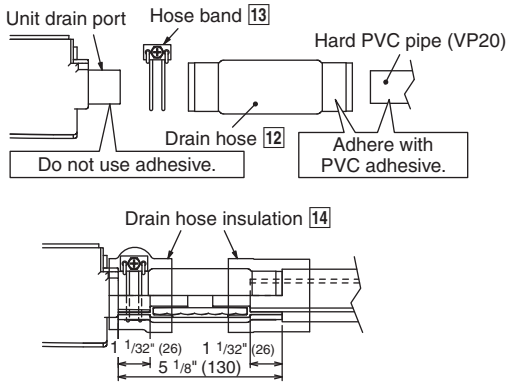

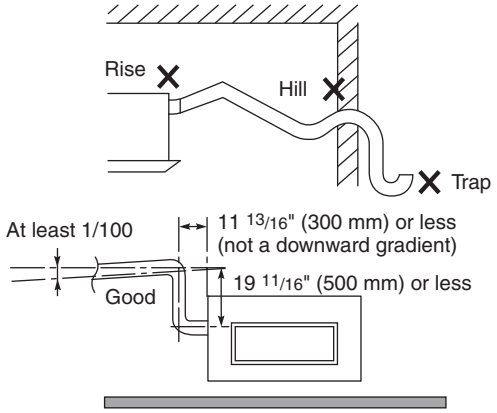

⚠ CAUTION

- Strictly do not install and extend the drain piping from the main unit drain water outlet horizontally or upward or raised it 19 11/16" (500 mm) or more.
  Doing so may result in poor drainage or drain motor failure.
- Do not use drain hose bent at 90° angle. (The maximum permissible bend is 45°.)

11.1.5 Insulating the Refrigerant Piping

- After the piping is connected, insulate. (Refer to the illustration)

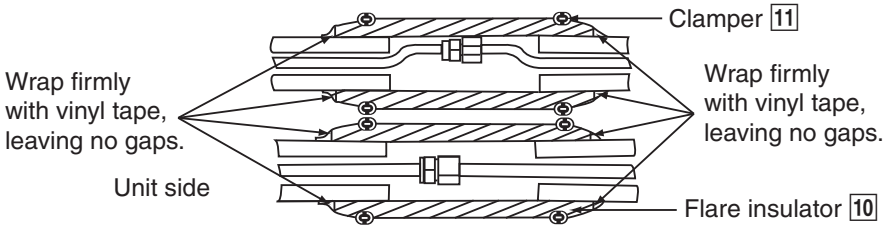

11.1.6 Connect the Cable to the Indoor Unit

- Remove control box cover.
- Remove the plugs.
- Fix the conduit connections to the knockout holes together with lock nuts, then secure them against the control box side panel.
- Receiver cable wires [8] must pass through the upper conduit hole.
  Make sure the receiver cable is inserted from inside of the control box.
  Connect receiver cable connector to control box wire connector and fix it to the power supply cord holder as shown in the diagram.
  Insert firmly the connector of receiver cable [8] to connector at control box of indoor unit.
- Connection cable between indoor unit and outdoor unit should be UL listed or CSA approved 4 conductor wires minimum AWG16 in accordance with local electric codes.
  - Ensure that the terminal numbers on the indoor unit are connected to the same terminal numbers on the outdoor unit by the right coloured wires as shown in the diagram.
  - Earth lead wire should be longer than the other lead wires as shown in the diagram for electrical safety purpose in case the cord slips out from the anchorage.
  - Secure the cable onto the control board with the holder (clamper).

Terminals on the indoor unit	1	2	3	⏚
Colour of wires				
Terminals on the outdoor unit	1	2	3	⏚

⚠ CAUTION

When the wall is hollow, please be sure to use the sleeve for tube ass'y to prevent dangers caused by mice biting the connection cable.

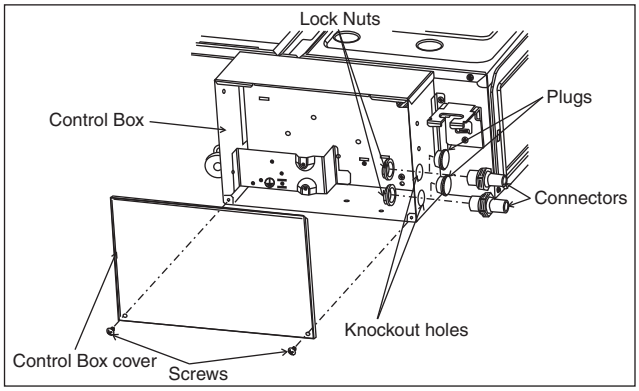

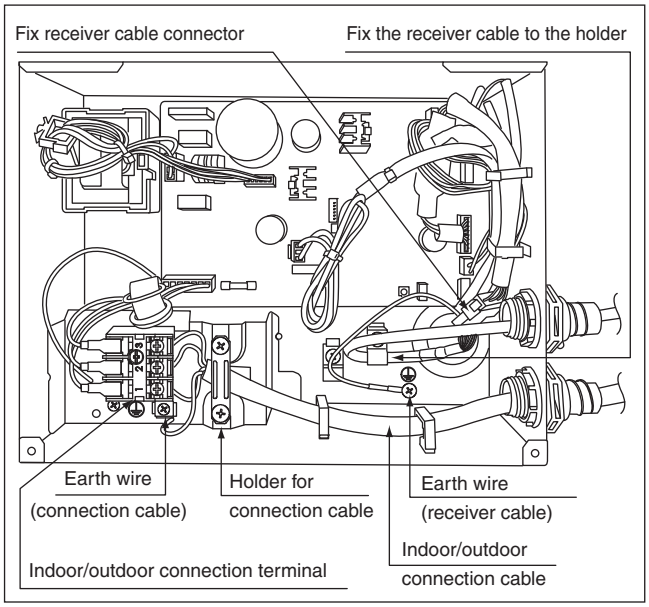

⚠ WARNING

⏚ This equipment must be properly earthed.

- Ensure the colour of wires of outdoor unit and the terminal Nos. are the same to the indoor's respectively.
- Earth wire shall be Yellow/Green (Y/G) in colour and longer than other AC wires for safety reason.

11.1.6.1 Wire Stripping and Connecting Requirement

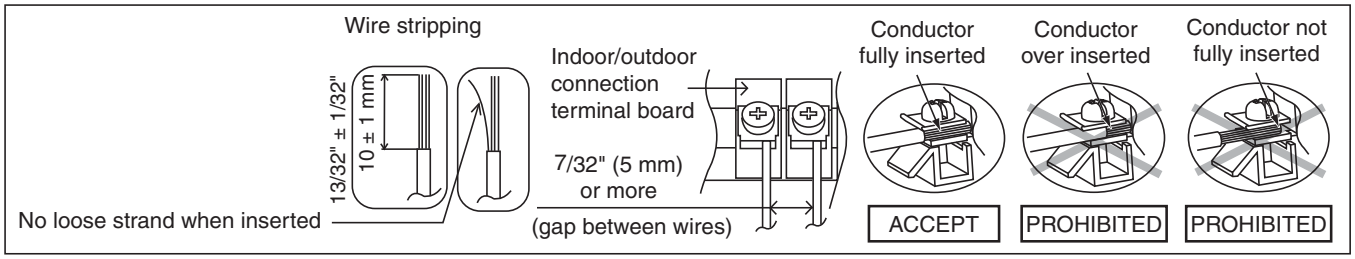

Do not joint wires

WARNING

RISK OF FIRE
JOINING OF WIRES MAY CAUSE OVERHEATING AND FIRE.

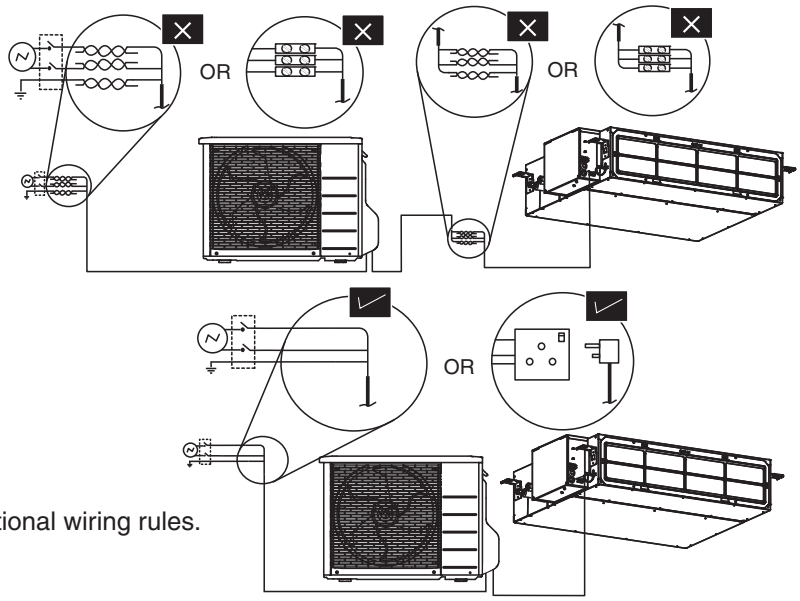

- Use complete wire without joining.
- Use approved socket and plug with earth pin.
- Wire connection in this area must follow to national wiring rules.

11.2 Outdoor Unit

11.2.1 Select the Best Location

11.2.2 Install the Outdoor Unit

- After selecting the best location, start installation to Indoor/Outdoor Unit Installation Diagram.
  1 Fix the unit on concrete or rigid frame firmly and horizontally with a bolt nut (ø 13/32" (ø10 mm)).
  2 When installing at roof, please consider strong wind and earthquake.
  Please fasten the installation stand firmly with bolt or nails.

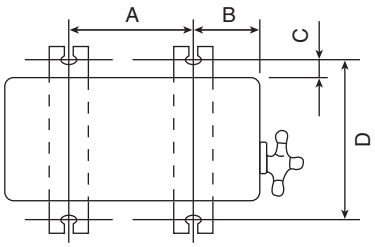

Model	A	B	C	D
E9SD3UAW, E12SD3UAW	22 7/16" (570 mm)	4 1/8" (105 mm)	23/32" (18.5 mm)	12 19/32" (320 mm)
E18SD3UAW	24 1/8" (613 mm)	5 5/32" (131 mm)	5/8" (16 mm)	14 3/16" (360.5 mm)

11.2.3 Connect the Piping

11.2.3.1 Connecting the Piping to Indoor

Please make flare after inserting flare nut (locate at joint portion of tube assembly) onto the copper pipe. (In case of using long piping)

Connect the piping
- Align the center of piping and sufficiently tighten the flare nut with fingers.
- Further tighten the flare nut with torque wrench in specified torque as stated in the table.

Do not over tighten, overtightening may cause gas leakage.

Piping size	Torque
1/4" (6.35 mm)	13.3 lbf•ft [18 N•m (1.8 kgf•m)]
3/8" (9.52 mm)	31.0 lbf•ft [42 N•m (4.3 kgf•m)]
1/2" (12.7 mm)	40.6 lbf•ft [55 N•m (5.6 kgf•m)]
5/8" (15.88 mm)	47.9 lbf•ft [65 N•m (6.6 kgf•m)]
3/4" (19.05 mm)	73.8 lbf•ft [100 N•m (10.2 kgf•m)]

11.2.3.2 Connecting the Piping to Outdoor

Decide piping length and then cut by using pipe cutter.
Remove burrs from cut edge.
Make flare after inserting the flare nut (locate at valve) onto the copper pipe.
Align center of piping to valve and then tighten with torque wrench to the specified torque as stated in the table.

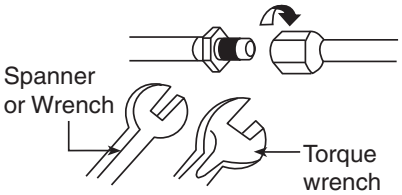

11.2.3.3 Connecting the Piping to Outdoor Multi

Decide piping length and then cut by using pipe cutter.
Remove burrs from cut edge.
Make flare after inserting the flare nut (locate at valve) onto the copper pipe.
Align center of piping to valve and then tighten with torque wrench to the specified torque as stated in the table.

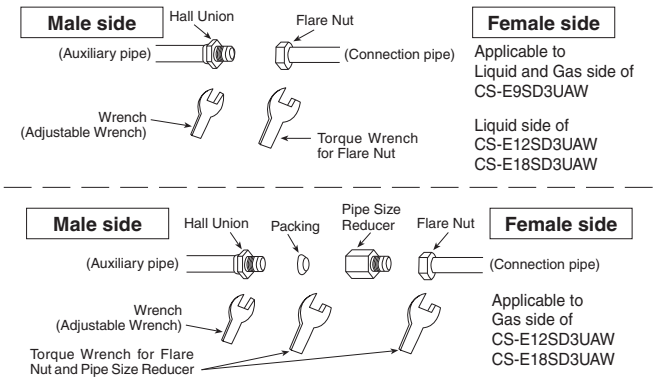

11.2.3.4 Gas Leak Checking

Pressure test to system to 400 PSIG with dry nitrogen, in stages. Thoroughly leak check the system. If the pressure holds, release the nitrogen and proceed to section 4.

11.2.4 Evacuation of the Equipment

WHEN INSTALLING AN AIR CONDITIONER, BE SURE TO EVACUATE THE AIR INSIDE THE INDOOR UNIT AND PIPES in the following procedure.

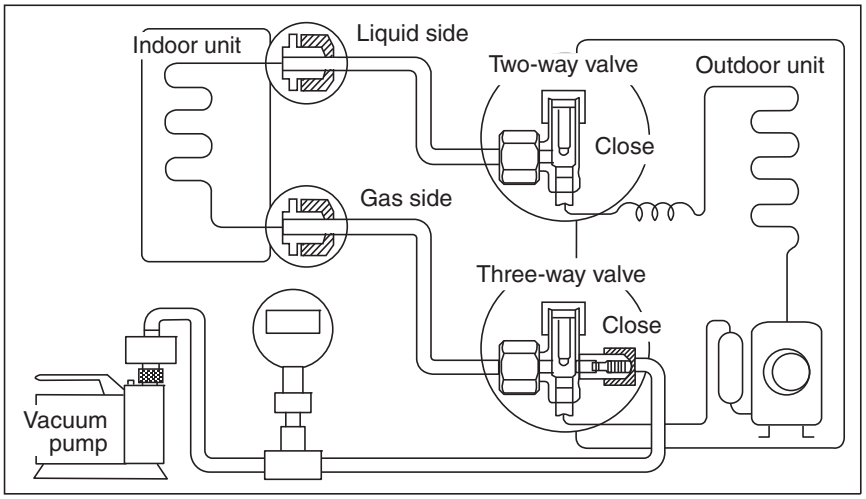

1 Connect a charging hose with a push pin to the Low side of a charging set and the service port of the 3-way valve.
2 Connect the micron gauge between vacuum pump and service port of outdoor units.
3 Turn on the power switch of the vacuum pump and make sure that connect digital micron gauge and to pull down to a value of 500 microns.
4 To make sure micron gauge a value 500 microns and close the low side valve of the charging set and turn off the vacuum pump.
5 Disconnect the vacuum pump house from the service port of the 3-way valve.
6 Tighten the service port caps of the 3-way valve at a torque of 13.3 lbf•ft (18 N•m) with a torque wrench.
7 Remove the valve caps of both of the 2-way valve and 3-way valve. Position both of the valves to “Open” using a hexagonal wrench (5/32" (4 mm)).
8 Mount valve caps onto the 2-way valve and the 3-way valve.
   - Be sure to check for gas leakage.

- If micron gauge value does not descend 500 microns, take the following measures:
- If the leak stops when the piping connections are tightened further, continue working from step ③.
- If the leak does not stop when the connections are retightened, repair location of leak.
- Do not release refrigerant during piping work for installation and reinstallation.
- Be careful with the liquid refrigerant, it may cause frostbite.

11.2.5 Connect the cable to the Outdoor Unit

- For model E9SD3UAW, E12SD3UAW
  1 Remove Top panel.
  2 Remove Control Board Cover (Resin and Metal).
  3 Remove Plugs.
  4 Fix the conduit connectors to the knockout holes with lock-nuts, then secure them against the side panel.
  5 All wires pass through conduits.
  6 Connection cable between indoor unit and outdoor unit should be UL listed or CSA approved 4 conductor wires minimum AWG16 in accordance with local electric codes.
  7 Wire connection to the power supply (208/230V 60Hz) through circuit breaker.
    - Connect the UL listed or CSA approved wires minimum AWG14 to the terminal board, and connect the other end of the wires to ELCB / GFCI.

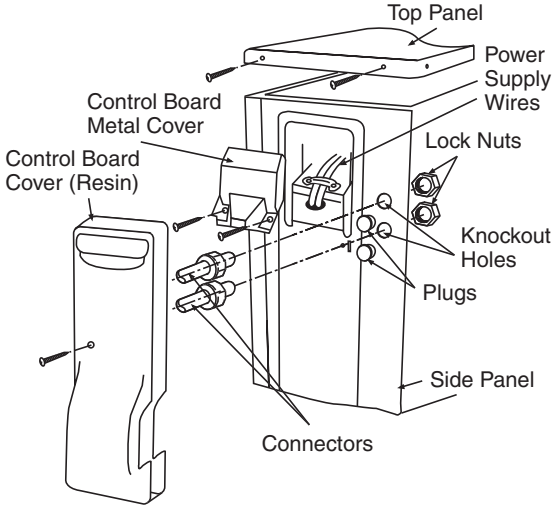

  8 Connect the power supply cord and connection cable between indoor unit and outdoor unit according to the diagram below.

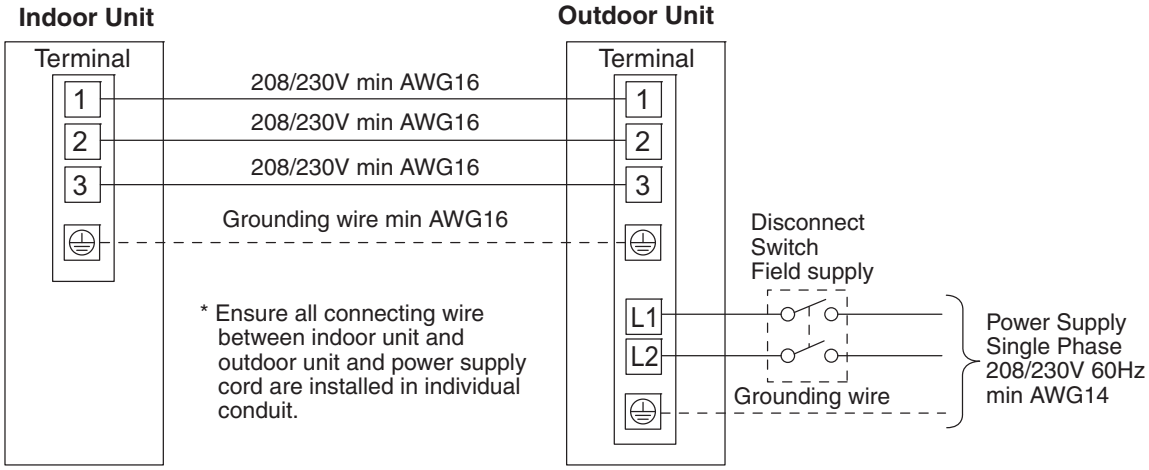

  9 Secure the wire onto the control board with the holder (clamper).
  10 After completing wiring connections, reattach the control board cover (Metal and Resin) and the top panel to the original position with the screws.
  11 For wire stripping and connection requirement, refer to instruction 11.1.6 of indoor unit.

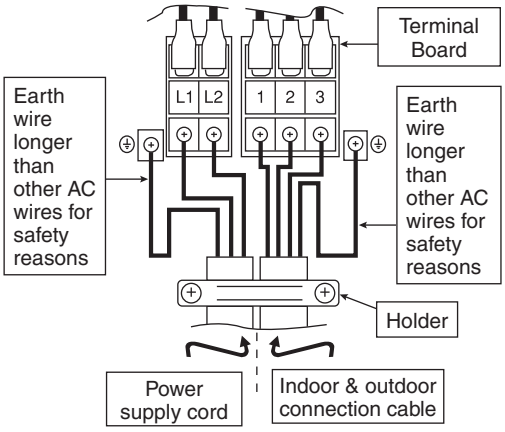

⚠ WARNING
⏚ This equipment must be properly earthed.

- Earth lead wire shall be Yellow/Green (Y/G) in colour and should be longer than other lead wires as shown in the figure for electrical safety in case of slipping.

- For model E18SD3UAW
  1 Remove control board cover (Resin and Metal).
  2 Remove particular plate.
  3 Remove plugs.
  4 Fix the conduit connectors to the knockout holes with lock-nuts, then secure them against the side panel.
  5 All wires pass through conduits & particular plate's opening hole.
  6 Connecting wire between indoor unit and outdoor unit should be UL listed or CSA approved 4 conductor wires minimum AWG16 in accordance with local electric codes.
  7 Wire connection to the power supply (208/230V 60Hz) through circuit breaker.
    - Connect the UL listed or CSA approved wires minimum AWG12 to the terminal board, and connect the other end of the wires to ELCB / GFCI.

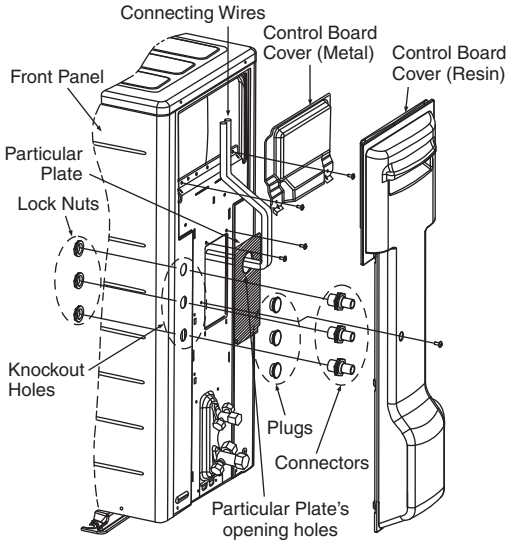

  8 Connect the power supply cord and connecting wire between indoor unit and outdoor unit according to the diagram below.

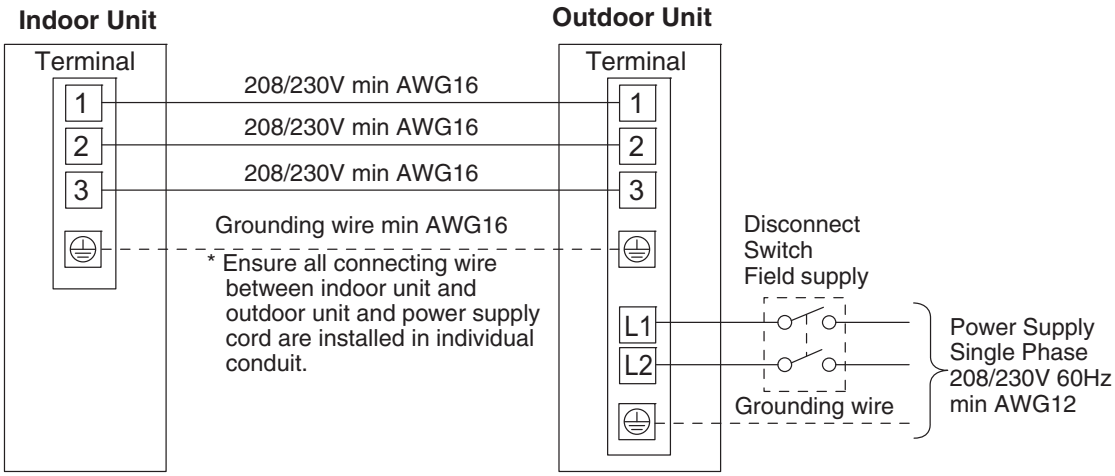

  9 Secure the wire onto the control board with the holder (clamper).
  10 After completing wiring connections, reattach the particular plate and control board cover (metal and resin) to the original position with the screws.
  11 For wire stripping and connection requirement, refer to instruction 11.1.6 of indoor unit.

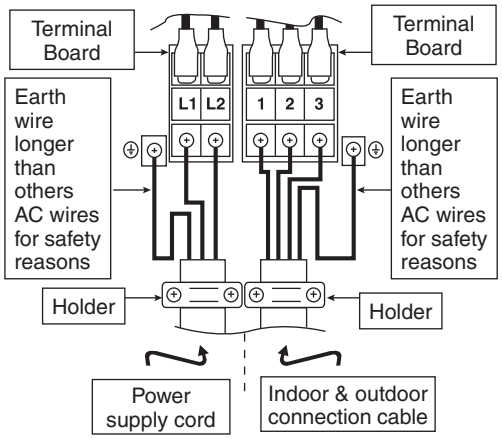

⚠ WARNING
⏚ This equipment must be properly earthed.

- Earth lead wire shall be Yellow/Green (Y/G) in colour and longer than other lead wires for electrical safety in case of the slipping.

11.2.6 Piping Insulation

1 Please carry out insulation at pipe connection portion as mentioned in Indoor/Outdoor Unit Installation Diagram. Please wrap the insulated piping end to prevent water from going inside the piping.
2 If drain hose or connecting piping is in the room (where dew may form), please increase the insulation by using POLY-E FOAM with thickness 1/4" (6 mm) or above.

Switching the High State Switch (SW2)

- To increase the air volume, open the control box and on the control board, switch the FAN switch (SW2) to “HI”.
- See the diagram for “Connecting the Indoor/Outdoor Connection Cable”.

Note: Enabling Long-range Remote Control

- To maintain EMC emission limits, cabling interconnecting the HA terminal and subsequent opto-coupler, must be no more than 6.2 ft (1.9 m) length.
- Loop four turns of this cable through a suitable small EMC ferrite toroid, and protect with a short length of large diameter heat-shrink tube.
- There is no similar length limit for cable following on from the opto-coupler isolation.

DISPOSAL OF OUTDOOR UNIT DRAIN WATER

- If a drain elbow is used, the unit should be placed on a stand which is taller than 1 3/16" (30 mm).
- If the unit is used in an area where temperature falls below 32°F (0°C) for 2 or 3 days in succession, it is recommended not to use a drain elbow, for the drain water freezes and the fan will not rotate.

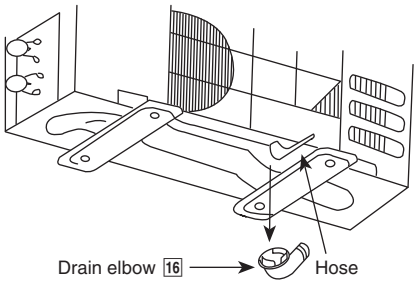

Install the hose at an angle so that the water smoothly flows out.

CHECK THE DRAINAGE

Check after connecting the power supply.

- Pour approximately 600 cc of water into the drain pan of the main unit using a squeeze bottle, etc.
- Press the drain test run switch on the control board in the control box to start the drain motor and check whether the water drains normally. (The drain motor operates for approximately 5 minutes and then stops automatically.) (See the diagram for “Connecting the Indoor/Outdoor Connection Cable”.)

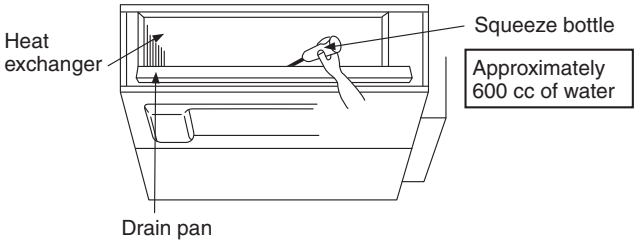

12. Operation and Control

12.1 Basic Function

Inverter control, which equipped with a microcomputer in determining the most suitable operating mode as time passes, automatically adjusts output power for maximum comfort always. In order to achieve the suitable operating mode, the microcomputer maintains the set temperature by measuring the temperature of the environment and performing temperature shifting. The compressor at outdoor unit is operating following the frequency instructed by the microcomputer at indoor unit that judging the condition according to internal setting temperature and intake air temperature.

12.1.1 Internal Setting Temperature

Once the operation starts, remote control setting temperature will be taken as base value for temperature shifting processes. These shifting processes are depending on the air conditioner settings and the operation environment. The final shifted value will be used as internal setting temperature and it is updated continuously whenever the electrical power is supplied to the unit.

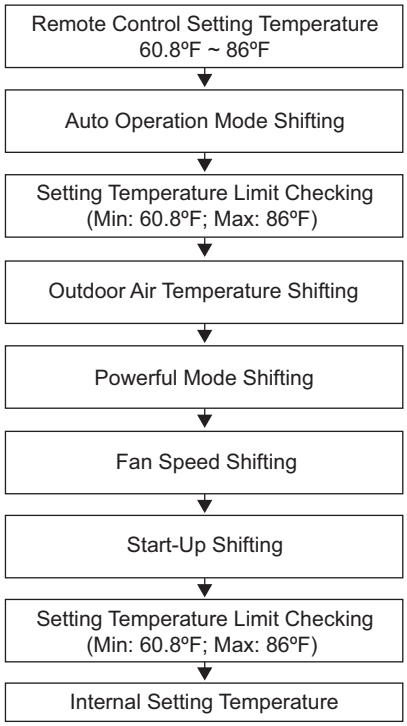

12.1.2 Cooling Operation

12.1.2.1 Thermostat control

- Compressor is OFF when Intake Air Temperature - Internal Setting Temperature < -3.6°F continue for 3 minutes.
- Compressor is ON after waiting for 3 minutes, if the Intake Air Temperature - Internal Setting Temperature > Compressor OFF point.

12.1.3 Soft Dry Operation

12.1.3.1 Thermostat control

- Compressor is OFF when Intake Air Temperature - Internal Setting Temperate < -3.6°F continue for 3 minutes.
- Compressor is ON after waiting for 3 minutes, if the Intake Air Temperature - Internal Setting Temperature > Compressor OFF point.

12.1.4 Heating Operation

12.1.4.1 Thermostat control

- Compressor is OFF when Intake Air Temperature - Internal Setting Temperate > +3.6°F.
- Compressor is ON after waiting for 3 minutes, if the Intake Air Temperature - Internal Setting Temperature < Compressor OFF point.

12.1.5 Automatic Operation

- This mode can be set using remote control and the operation is decided by remote control setting temperature, remote control operation mode and indoor intake air temperature.
- During operation mode judgment, indoor fan motor (with speed of Lo-) is running for 30 seconds to detect the indoor intake air temperature.
- Every 10 minutes, the indoor temperature is judged.
- For the 1st judgment
  - If indoor intake temperature - remote control setting temperature ≥ 3.6°F, COOL mode is decided.
  - If -3.6°F ≤ indoor intake temperature - remote control setting temperature < 3.6°F, DRY mode is decided.
  - If indoor intake temperature - remote control setting temperature < -3.6°F, HEAT mode is decided.

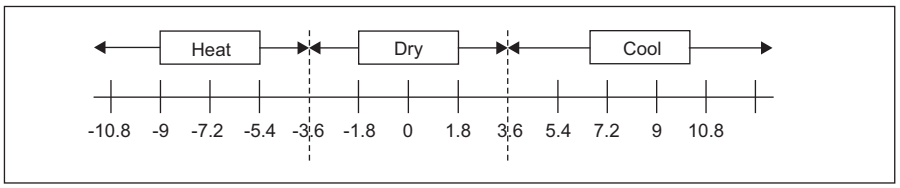

- For the 2nd judgment onwards
  - If indoor intake temperature - remote control setting temperature ≥ 5.4°F, if previous operate in DRY mode, then continue in DRY mode. Otherwise COOL mode is decided.
  - If -3.6°F ≤ indoor intake temperature - remote control setting temperature < 5.4°F, maintain with previous mode.
  - If indoor intake temperature - remote control setting temperature < -3.6°F, HEAT mode is decided.

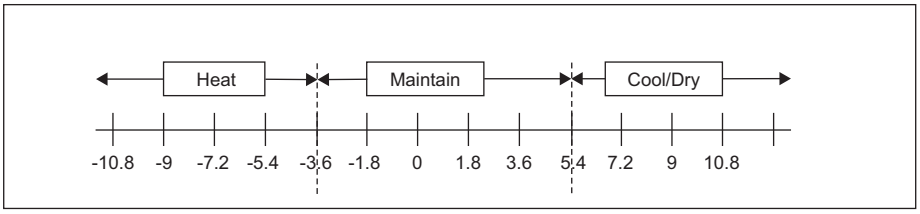

12.1.6 Indoor Fan Motor Operation

A. Basic Rotation Speed (rpm)

i. Manual Fan Speed

[Cooling, Dry]

- Fan motor's number of rotation is determined according to remote control setting.

Remote Control	O	O	O	O	O
Tab (rpm)	Hi	Me+	Me	Me-	Lo

[Heating]

- Fan motor's number of rotation is determined according to remote control setting.

Remote Control	O	O	O	O	O
Tab (rpm)	Shi	Me+	Me	Me-	Lo

ii. Auto Fan Speed

[Cooling, Dry]

- According to room temperature and setting temperature, indoor fan speed is determined automatically.

- The indoor fan will operate according to pattern below.

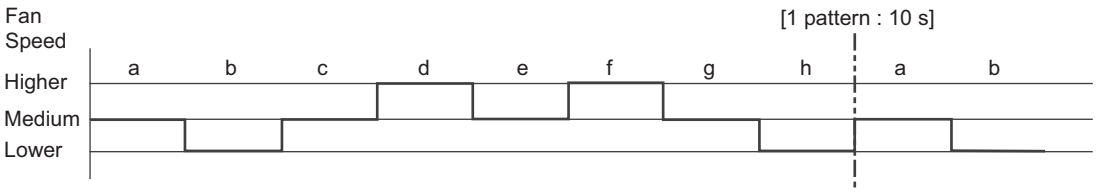

[Heating]

- According to indoor pipe temperature, automatic heating fan speed is determined as follows.

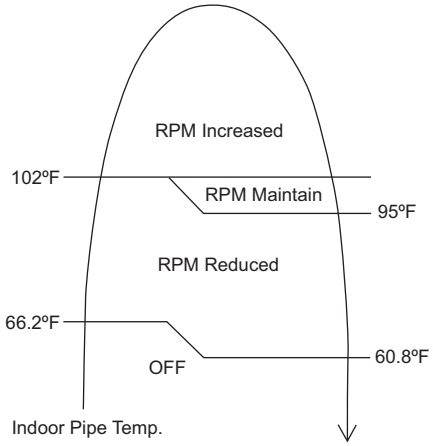

B. Feedback control

- Immediately after the fan motor started, feedback control is performed once every second.
- During fan motor on, if fan motor feedback ≥ 2550 rpm or < 50 rpm continue for 10 seconds, then fan motor error counter increase, fan motor is then stop and restart. If the fan motor counter becomes 7 times, then H19 - fan motor error is detected. Operation stops and cannot on back.

12.1.7 Outdoor Fan Motor Operation

Outdoor fan motor is operated with 15 fan speed. It starts when compressor starts operation and it stops 30 seconds after compressor stops operation.

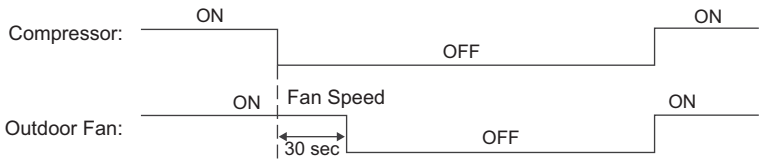

12.2 Quiet Operation (Cooling Mode/Cooling Area of Soft Dry Mode)

A. Purpose

To provide quiet cooling operation compare to normal operation.

B. Control condition

a. Quiet operation start condition

- When “quiet” button at remote control is pressed.
  Quiet LED illuminates.

b. Quiet operation stop condition

1. When one of the following conditions is satisfied, quiet operation stops:
   a. Powerful button is pressed.
   b. Stop by OFF/ON switch.
   c. Timer “off” activates.
   d. Quiet button is pressed again.
2. When quiet operation is stopped, operation is shifted to normal operation with previous setting.
3. When fan speed is changed, quiet operation is shifted to quiet operation of the new fan speed.
4. When operation mode is changed, quiet operation is shifted to quiet operation of the new mode.
5. During quiet operation, if timer “on” activates, quiet operation maintains.
6. After off, when on back, quiet operation is not memorised.

C. Control contents

1. Auto fan speed is changed from normal setting to quiet setting of respective fan speed.
   This is to reduce sound of Hi, Me, Lo for 3dB.
2. Manual fan speed for quiet operation is 1 step from setting fan speed.
3. Compressor frequency reduced.

12.2.1 Quiet operation (Heating)

A. Purpose

To provide quiet heating operation compare to normal operation.

B. Control condition

a. Quiet operation start condition

- When “quiet” button at remote control is pressed.
  Quiet LED illuminates.

b. Quiet operation stop condition

1. When one of the following conditions is satisfied, quiet operation stops:
   a. Powerful button is pressed.
   b. Stop by OFF/ON switch.
   c. Timer “off” activates.
   d. Quiet button is pressed again.
2. When quiet operation is stopped, operation is shifted to normal operation with previous setting.
3. When fan speed is changed, quiet operation is shifted to quiet operation of the new fan speed.
4. When operation mode is changed, quiet operation is shifted to quiet operation of the new mode, except fan only mode.
5. During quiet operation, if timer “on” activates, quiet operation maintains.
6. After off, when on back, quiet operation is not memorised.

C. Control contents

a. Fan Speed Auto

- Indoor FM RPM depends on pipe temperature sensor of indoor heat exchanger.
  Auto fan speed is changed from normal setting to quiet setting of respective fan speed.
  This is to reduce sound of Hi, Me, Lo for 3dB.

b. Fan Speed Manual

- Manual fan speed for quiet operation is - 1 step from setting fan speed.

c. Compressor frequency reduced.

12.3 Powerful Mode Operation

When the powerful mode is selected, the internal setting temperature will shift higher up to +10.8°F (for Heating) or lower up to 7.2°F (for Cooling/Soft Dry) than remote control setting temperature for 20 minutes to achieve the setting temperature quickly.

12.4 Timer Control

12.4.1 ON Timer Control

ON timer can be set using remote control, the unit with timer set will start operate earlier than the setting time. This is to provide a comfortable environment when reaching the set ON time.

60 minutes before the set time, indoor (at fan speed of Lo-) and outdoor fan motor start operate for 30 seconds to determine the indoor intake air temperature and outdoor air temperature in order to judge the operation starting time.

From the above judgment, the decided operation will start operate earlier than the set time as shown below.

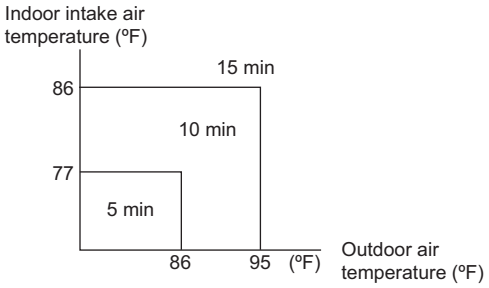

Cooling/Soft Dry

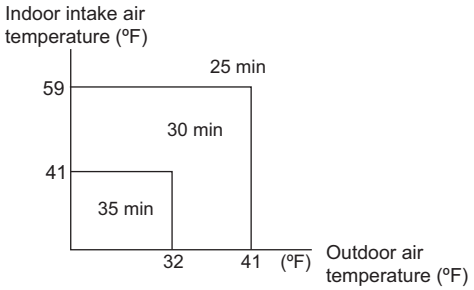

Heating

12.4.2 OFF Timer Control

OFF timer can be set using remote control, the unit with timer set will stop operate at set time.

12.5 Auto Restart Control

1. When the power supply is cut off during the operation of air conditioner, the compressor will re-operate within three to four minutes (there are 10 patterns between 2 minutes 58 seconds and 3 minutes 52 seconds to be selected randomly) after power supply resumes.
2. This type of control is not applicable during ON/OFF Timer setting.
3. This control can be omitted by open the circuit of JP10 at indoor unit printed board.

12.6 Indication Panel

LED	OFF/ON Operation
Color	Green
Light ON	Operation ON
Light OFF	Operation OFF

Note:

- If OFF/ON operation LED is OFF and OFF indicator does not shown on remote control display, there is an abnormality operation occurs.

12.7 Electric Heater Control 1

Starting condition

A) When all condition (1+2+3+4+5+6+7) are fulfilled.

1 Operation ON
2 Indoor Heating mode
3 Thermostat ON
4 Temperature different control

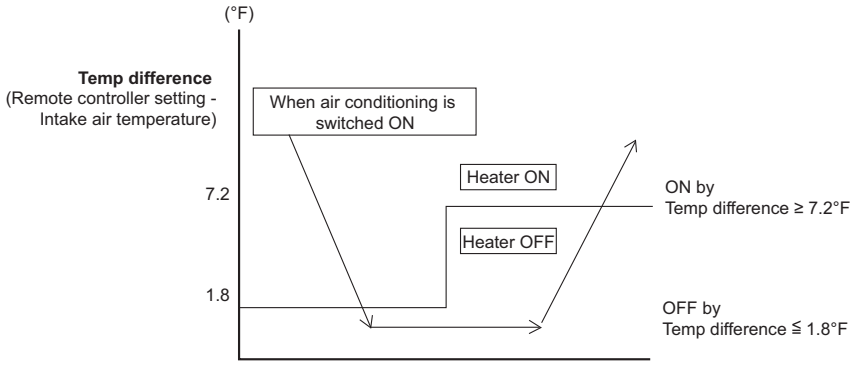

Example:

1 When air conditioning is switch ON,
Remote controller setting = 82.4°F
Intake air temperature = 78.8°F
Temp difference = 82.4-78.8 = 3.6°F
Heater ON

2 After a while when
Remote controller setting =82.4°F
Intake air temperature = 80.6°F
Temp difference = 82.4-80.6 =1.8°F
Heater OFF

3 After a while when
Temp difference ≥ 7.2°F
Heater ON

5 Intake air temperature control

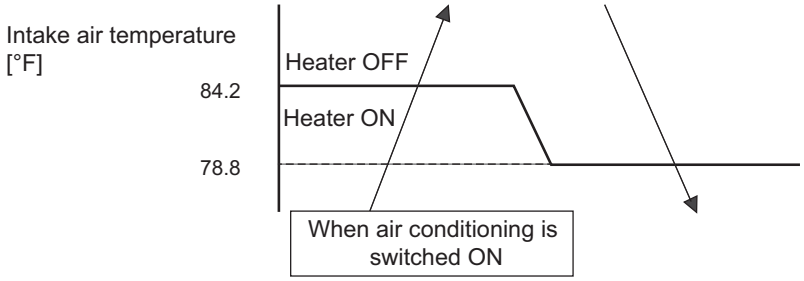

6 Evaporator pipe sensor control

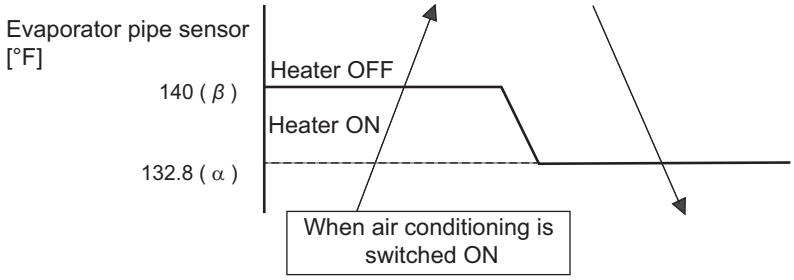

7 Indoor Fan speed ≥ Lo Fan

Control content

1 Electric heater will be switch ON when all condition for starting condition fulfilled.
2 Once Electric heater switched ON, It will operate at least 3 minutes.

12.8 Electric Heater Control 2

- During Error happened, air conditioning unit will stop operation, TIMER LED will blink and indoor vane closed.
- Electric heater can be switch ON when fulfill the starting condition as follow except 2 errors.
  - H14 (Indoor intake air temperature sensor abnormality)
  - H19 (Indoor fan motor mechanism lock)

Starting condition
When all condition (1+2+3+4) are fulfilled.

1 Operation ON
2 Indoor Heating mode
3 Error happened Except error H14 and H19
4 Temperature different control

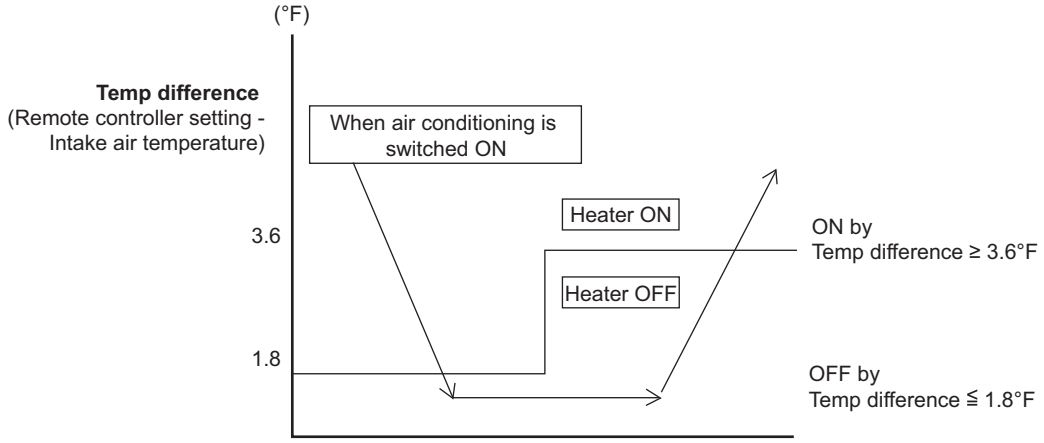

Control content
1 Indoor unit will start operate when receive operation ON signal from remote controller.
2 Indoor fan speed
  i) For error
    H23 - Indoor heat exchange sensor 1 abnormality
    H24 - Indoor heat exchange sensor 2 abnormality
    H27 - Outdoor air temperature sensor abnormality
    H28 - Outdoor heat exchange sensor abnormality

    Me Fan
    (Fan speed higher than other error because the outdoor unit compressor will still run at preset frequency about 27Hz (H23, H24) and 40Hz (H27, H28)

  ii) Other errors
    minimum fan speed = Lo Fan
3 Once Electric heater switched ON, It will operate at least 3 minutes.

13. Protection Control

13.1 Protection Control For All Operations

13.1.1 Restart Control (Time Delay Safety Control)

- The Compressor will not turn on within 3 minutes from the moment operation stops, although the unit is turned on again by pressing OFF/ON button at remote control within this period.
- This control is not applicable if the power supply is cut off and on again.
- This phenomenon is to balance the pressure inside the refrigerant cycle.

13.1.2 30 Seconds Forced Operation

- Once the air conditioner is turned on, the compressor will not stop within 30 seconds in a normal operation although the intake air temperature has reached the thermo-off temperature. However, force stop by pressing the OFF/ON button at the remote control is permitted or the Auto OFF/ON button at indoor unit.
- The reason for the compressor to force operation for minimum 30 seconds is to allow the refrigerant oil run in a full cycle and return back to the outdoor unit.

13.1.3 Total Running Current Control

1 When the outdoor unit total running current (AC) exceeds X value, the frequency instructed for compressor operation will be decreased.

2 If the running current does not exceed X value for five seconds, the frequency instructed will be increased.

3 However, if total outdoor unit running current exceeds Y value, compressor will be stopped immediately for 3 minutes.

		E9SD3UA		E12SD3UA		E18SD3UA	
Operation mode		X (A)	Y (A)	X (A)	Y (A)	X (A)	Y (A)
Cool	A	3.89	15.01	6.55	15.01	12.39	19.30
	B	3.28	15.01	6.10	15.01	11.43	19.30
	C	3.28	15.01	6.10	15.01	10.05	19.30
Heating		5.27	15.01	7.05	15.01	12.86	19.30

4 The first 30 minutes of cooling operation, (A) will be applied.

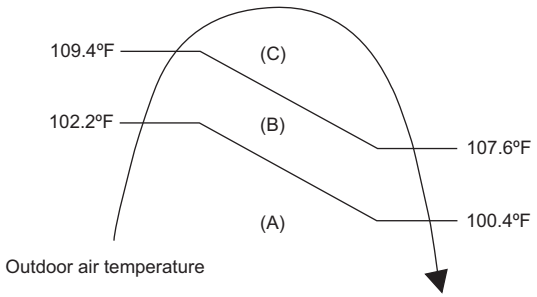

13.1.4 IPM (Power transistor) Prevention Control

- Overheating Prevention Control
  1. When the IPM temperature rises to 248°F, compressor operation will stop immediately.
  2. Compressor operation restarts after three minutes the temperature decreases to 230°F.

- DC Peak Current Control
  1. When electric current to IPM exceeds set value of 30.0 ± 5.0 A, the compressor will stop operate. Then, operation will restart after three minutes.
  2. If the set value is exceeded again more than 30 seconds after the compressor starts, the operation will restart after two minutes.
  3. If the set value is exceeded again within 30 seconds after the compressor starts, the operation will restart after one minute. If this condition repeats continuously for seven times, all indoor and outdoor relays will be cut off.

13.1.5 Compressor Overheating Prevention Control

Instructed frequency for compressor operation will be regulated by compressor top temperature. The changes of frequency are as below figure.
If compressor temperature exceeds 224.6°F, compressor will be stop, occurs 4 times per 20 minutes, timer LED will be blinking (“F97” is to be confirmed).

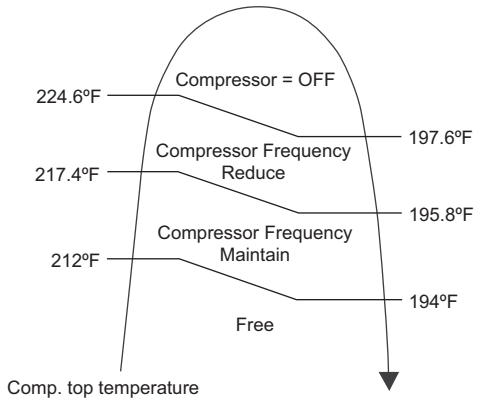

13.2 Protection Control For Cooling & Soft Dry Operation

13.2.1 Outdoor Air Temperature Control

The compressor operating frequency is regulated in accordance to the outdoor air temperature as shown in the diagram below.
This control will begin 1 minute after the compressor starts.
Compressor frequency will adjust base on Outdoor Air Temperature.

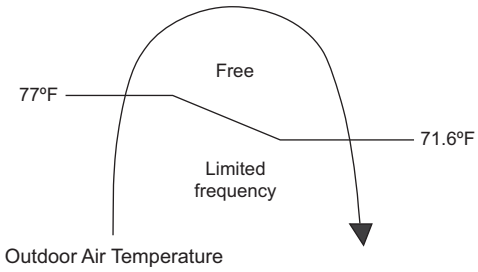

13.2.2 Cooling Overload Control

i. Pipe temperature limitation/restriction

- Detects the Outdoor pipe temperature and carry out below restriction/limitation (Limit the compressor Operation frequency)
- The compressor stop if outdoor pipe temperature exceeds 145.4°F.
- If the compressor stops 4 times in 20 minutes, Timer LED blinking (F95: outdoor high pressure rise protection)

13.2.3 Dew Prevention Control 1

1. To prevent dew formation at indoor unit discharge area.
2. This control activated if:
   - Outdoor air temperature and Indoor pipe temperature judgment by microcontroller if fulfilled.
   - When Cooling or Dry mode is operated more than 20 minutes or more.
3. This control stopped if:
   - Compressor stopped.
   - Remote control setting changed. (fan speed/temperature)
   - Outdoor air temperature and indoor intake temperature changed.

13.2.4 Freeze Prevention Control

1. When indoor heat exchanger temperature is lower than 32°F continuously for six minutes, compressor will stop operating.
2. Compressor will resume its operation 3 minutes after the indoor heat exchanger is higher than 41°F.
3. At the same time, indoor fan speed will be higher than during its normal operation.
4. If indoor heat exchanger temperature is higher than 55.4°F, the fan speed will return to its normal operation.

13.3 Protection Control for Heating Operation

13.3.1 Intake Air Temperature Control

Compressor will operate at maximum frequency if below conditions occur:

1 When the indoor intake air temperature is 86°F or above.

13.3.2 Outdoor Air Temperature Control

The maximum current value is regulated when the outdoor air temperature rises above 57.2°F in order to avoid compressor overloading.

13.3.3 Overload Protection Control

The compressor operating frequency is regulated in accordance to indoor heat exchanger temperature as shown in below figures.
If the heat exchanger temperature exceeds 140°F, compressor will stop.

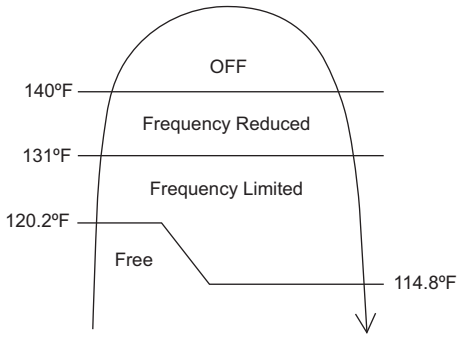

13.3.4 Cold Draught Operation

When indoor pipe temperature is low, cold draught operation start where indoor fan speed will be reduced.

13.3.5 Deice Operation

When outdoor pipe temperature and outdoor temperature is low, deice operation start where indoor fan motor and outdoor fan motor stop and operation LED blinks.

13.3.6 Drain Pump Control

- This unit has built-in with drain pump.

Control content

- During COOL/DRY mode.
  - During COOL/DRY mode, drain pump starts 10 seconds after indoor fan motor starts.
  - The drain pump turns ON and turns OFF periodically. (ON or OFF duration depends on room temperature).

- After COOL/DRY mode, when unit turns OFF (power standby) or changes to HEAT mode.
  - The drain pump turns ON for 60 seconds immediately.

- Error judgment
  - When float switch detects ON signal continuously for 2 minutes 30 seconds, error code H21 are shown.
  - When float switch ON has operated 2 times within 20 minutes, error code H35 are shown.

13.3.7 Pump Down Operation By CN-S

- A convenience method to activate pump down operation.

- Control start condition:
  - During power standby condition, short CN-S continuously between 1 second and 10 seconds.

- Control stop condition:
  - 480 seconds after pump down operation starts.
  - CN-S is shorted again during pump down operation.

14. Servicing Mode

14.1 TEST RUN OPERATION (FOR PUMP DOWN/SERVICING PURPOSE)

- The Test Run operation will be activated by short-circuiting CN-S (Pin 1 & 2) at outdoor unit PCB after power supplied to outdoor unit terminal 1 and 2. The unit forced to run rated frequency cooling operation mode.

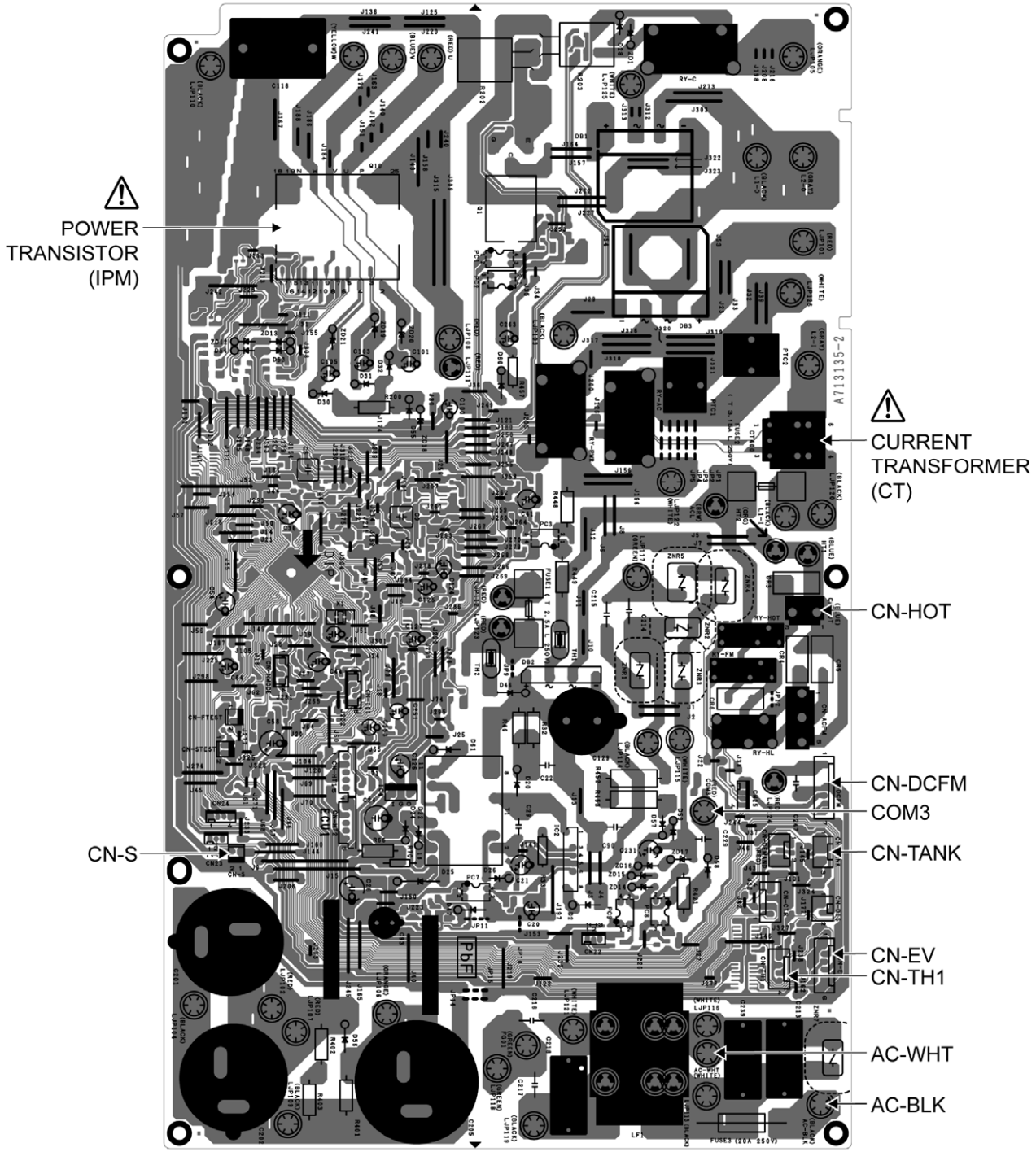

14.2 Auto OFF/ON Button

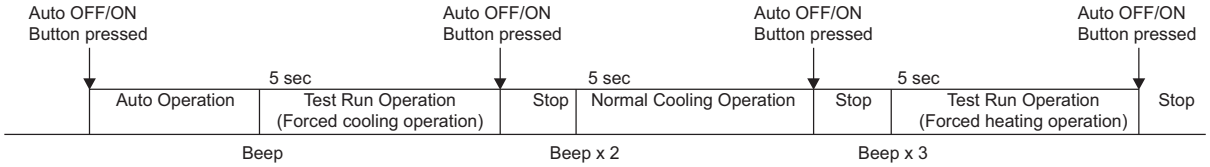

1 AUTO OPERATION MODE
The Auto operation will be activated immediately once the Auto OFF/ON button is pressed. This operation can be used to operate air conditioner with limited function if remote control is misplaced or malfunction.

2 TEST RUN OPERATION (FOR PUMP DOWN/SERVICING PURPOSE)
The Test Run operation will be activated if the Auto OFF/ON button is pressed continuously for more than 5 seconds. A “beep” sound will heard at the fifth seconds, in order to identify the starting of Test Run operation (Forced cooling operation). Within 5 minutes after Forced cooling operation start, the Auto OFF/ON button is pressed for more than 5 seconds. A 2 “beep” sounds will heard at the fifth seconds, in order to identify the starting of Normal cooling operation.
Within 5 minutes after Normal cooling operation start, the Auto OFF/ON button is pressed for more than 5 seconds. A 3 “beep” sounds will be heard at the fifth seconds, in order to identify the starting of Forced heating operation.

The Auto OFF/ON button may be used together with remote control to set / change the advance setting of air conditioner operation.

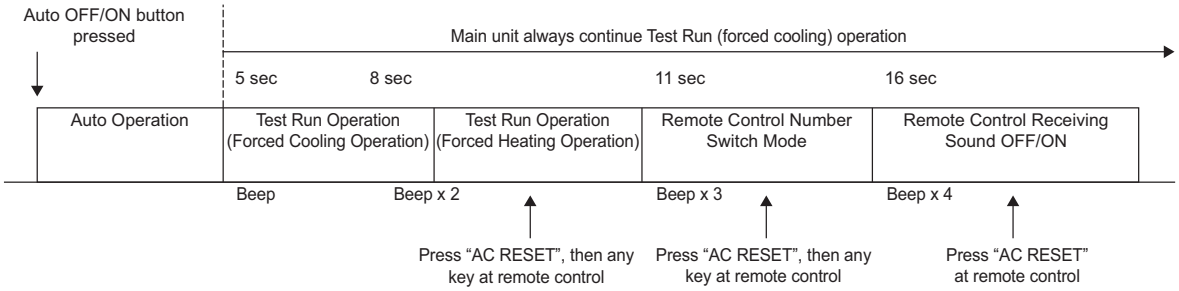

3 REMOTE CONTROL NUMBER SWITCH MODE
The Remote Control Number Switch Mode will be activated if the Auto OFF/ON button is pressed continuously for more than 11 seconds (3 “beep” sounds will occur at 11th seconds to identify the Remote Control Number Switch Mode is in standby condition) and press “AC RESET” button and then press any button at remote control to transmit and store the desired transmission code to the EEPROM.

There are 4 types of remote control transmission code could be selected and stored in EEPROM of indoor unit. The indoor unit will only operate when received signal with same transmission code from remote control. This could prevent signal interference when there are 2 or more indoor units installed nearby together.
To change remote control transmission code, short or open jumpers at the remote control printed circuit board.

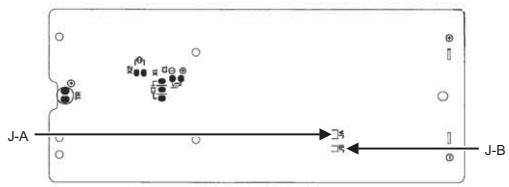

Remote Control Printed Circuit Board		
Jumper A (JA)	Jumper B (JB)	Remote Control No.
Short	Open	A (Default)
Open	Open	B
Short	Short	C
Open	Short	D

- During Remote Control Number Switch Mode, press any button at remote control to transmit and store the transmission code to the EEPROM.

14.3 Cooling Only Operation (Single connection Only, Multi connection please refer to Multi outdoor manual)

14.3.1 How to activate and deactivate Cooling Only Operation

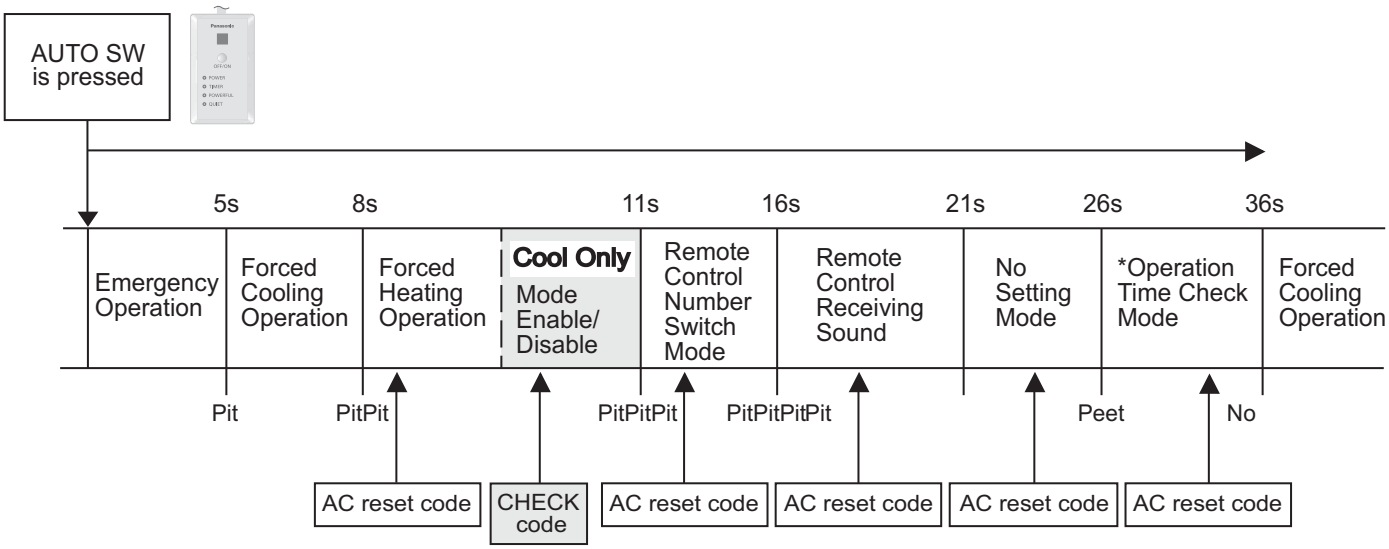

The default setting is “Cool Only” mode disable.

A) To enable the “Cool Only” mode, press the AUTO OFF/ON SW for more than 8s and less than 11s, “Pit Pit” sound will be heard, then release the AUTO OFF/ON SW and press remote controller CHECK button. A short “Pit” sound will be heard. “Cool Only” mode is now enable.

B) To disable the “Cool Only” mode, press the AUTO OFF/ON SW for more than 8s and less than 11s, “Pit Pit” sound will be heard, then release the AUTO OFF/ON SW and press remote controller CHECK button. A long “Pit” sound will be heard. “Cool Only” mode is now disable.

14.3.2 Operation mode during Cooling Only Operation

The table below show the operation mode comparison when cooling only operation mode activated and deactivated.

Operation mode	Cooling Only Operation Mode Activated	Cooling Only Operation Mode Deactivated
AUTO	After 30s sampling, regardless of indoor intake or outdoor intake temperature judgement, the unit will run Cooling or DRY operation.	After 30s sampling, the unit will judge the operation mode base on remote controller temperature setting and Indoor Intake Sensor (New Auto Mode) or Outdoor Intake Sensor (Old Auto Mode)
HEAT	The unit will stop and Power LED blinking.	The unit will run Heating operation.
COOL	The unit will run Cooling operation.	The unit will run Cooling operation.
DRY	The unit will run DRY operation.	The unit will run Dry operation.
Force Heating	The unit will run Force Cooling operation.	The unit will run Force Heating operation.
AUTO (with Timer)	The unit will turn ON by the timer and run Auto Operation. After 30s sampling, regardless of indoor intake or outdoor intake temperature judgement, the unit will run Cooling or DRY operation.	The unit will turn ON by the timer and run Auto Operation. After 30s sampling, the unit will judge the operation mode base on remote controller temperature setting and Indoor Intake Sensor (New Auto Mode) or Outdoor Intake Sensor (Old Auto Mode)
HEAT (with Timer)	The unit will not turn ON by the Timer. Power LED blinking.	The unit will turn ON by the timer and run Heating Operation.
COOL (with Timer)	The unit will turn ON by the Timer and run Cooling operation.	The unit will turn ON by the timer and run Cooling Operation.
DRY (with Timer)	The unit will turn ON by the Timer and run DRY operation.	The unit will turn ON by the timer and run Cooling Dry Operation.

** Power LED blinking = 2.5s ON, 0.5s OFF

14.4 Remote Controller Room Temperature Thermoshift Control

14.4.1 Purpose

To prevent not enough or over supply of cooling and heating capacity by adjusting the Room Temperature thermoshift by using remote controller.

Temperature can be adjusted are -3°C (-5.4°F), -2°C (-3.6°F), -1°C (-1.8°F), 0°C (0°F), 1°C (1.8°F), 2°C (3.6°F), 3°C (5.4°F)

Thermoshift adjusted by Remote controller will be stored into EEPROM and added into the final target setting temperature.

Function selection added to enable and disable this control.

14.4.2 Control method

Heating mode (using remocon function 58)

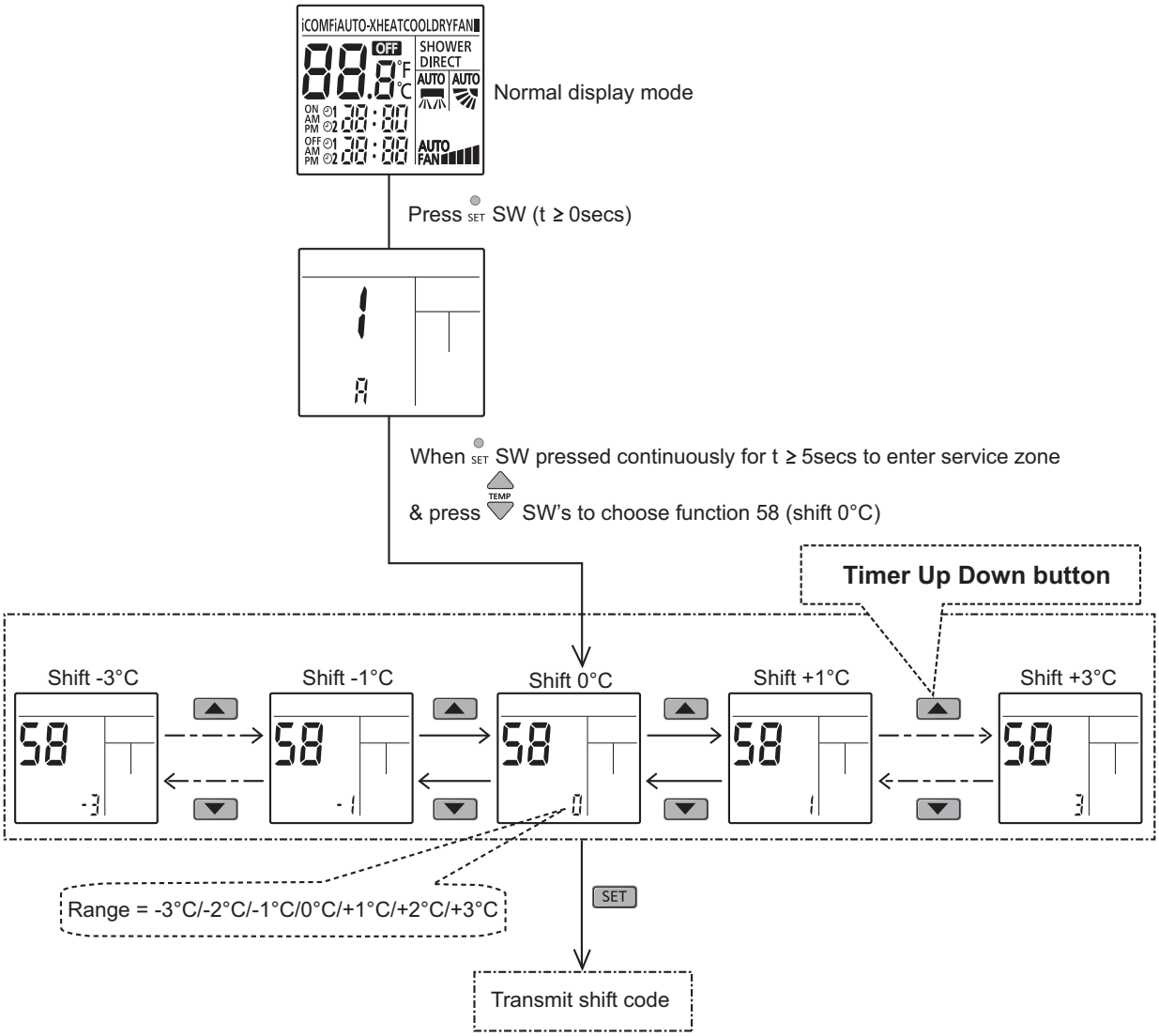

① Press CANCEL SW, special setting is immediately cancelled and normal mode starts.
② If no SW is pressed for 30secs, then special setting mode is cancelled and normal mode starts.
③ Under this function, only TEMP, SET, CANCEL & RESET SW's are effective.

Cooling or Dry mode (using remocon function 59)

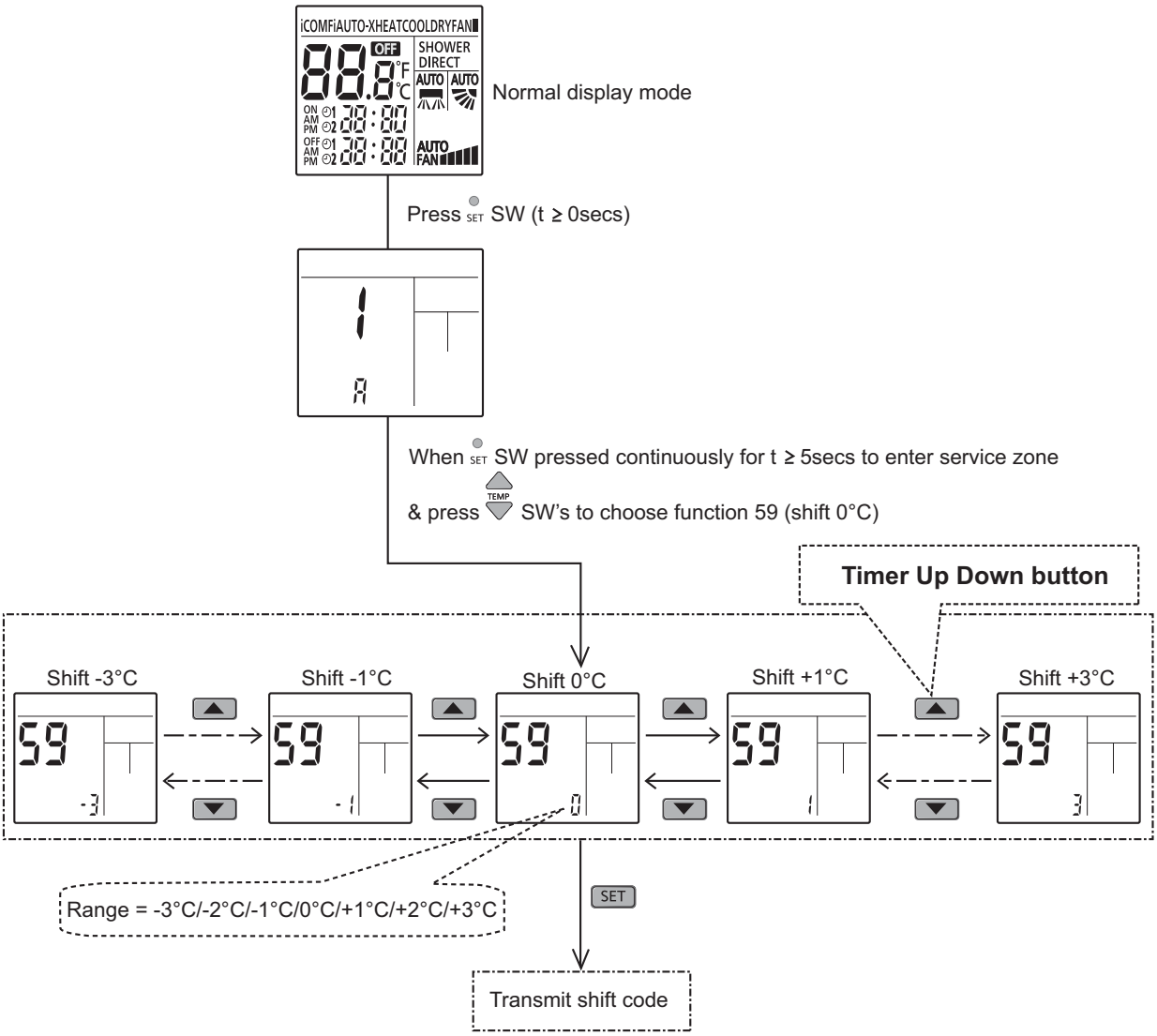

① Press CANCEL SW, special setting is immediately cancelled and normal mode starts.
② If no SW is pressed for 30secs, then special setting mode is cancelled and normal mode starts.
③ Under this function, only TEMP, SET, CANCEL & RC RESET SW's are effective.

Filter cleaning enable/disable selection

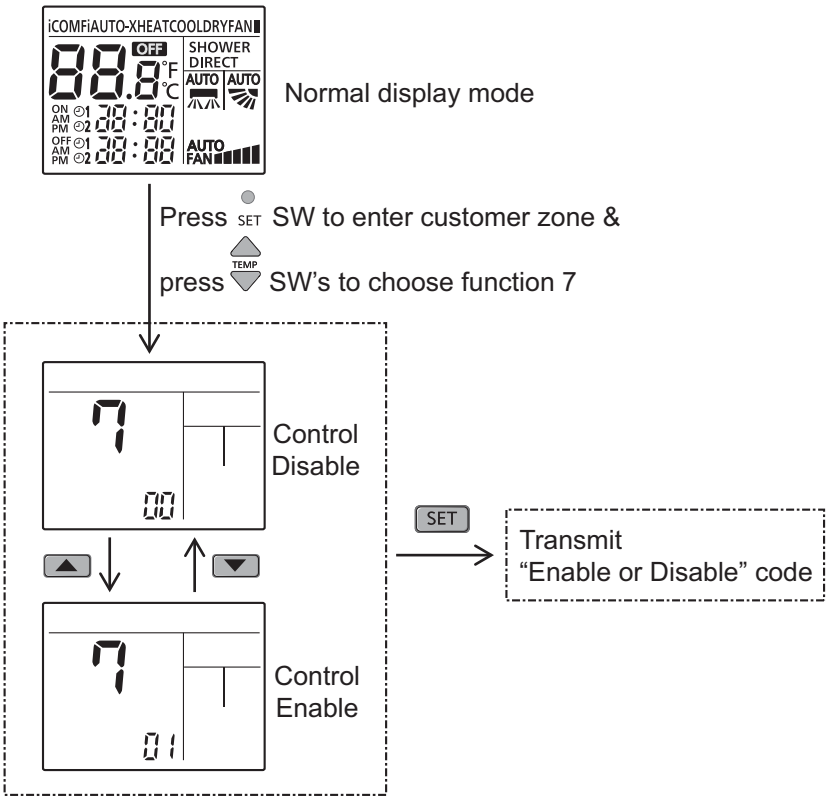

① Press CANCEL SW, special setting is immediately cancelled and normal mode starts.
② If no SW is pressed for 30secs, then special setting mode is cancelled and normal mode starts.
③ Under this function, only SET, CANCEL & RC RESET SW's are effective.

Note:
By default if enable.

Auto restart enable/disable selection

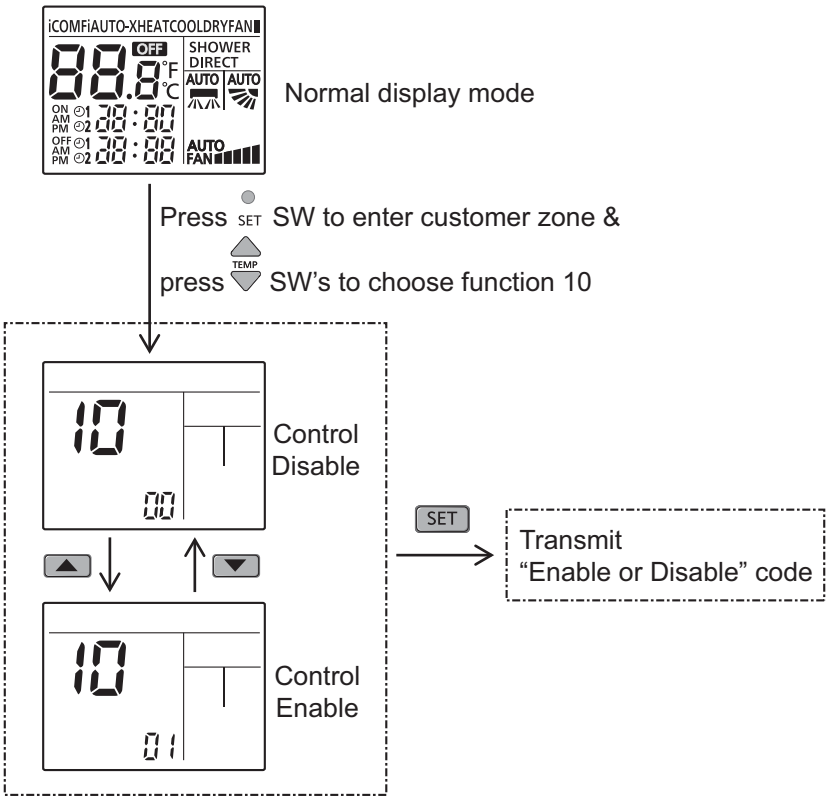

① Press CANCEL SW, special setting is immediately cancelled and normal mode starts.
② If no SW is pressed for 30secs, then special setting mode is cancelled and normal mode starts.
③ Under this function, only TEMP, ▲, ▼, SET, CANCEL & RC RESET SW's are effective.

Note:
By default if enable.

15. Troubleshooting Guide

15.1 Refrigeration Cycle System

In order to diagnose malfunctions, make sure that there are no electrical problems before inspecting the refrigeration cycle. Such problems include insufficient insulation, problem with the power source, malfunction of a compressor and a fan.
The normal outlet air temperature and pressure of the refrigeration cycle depends on various conditions, the standard values for them are shown in the table on the right.

Normal Pressure and Outlet Air Temperature (Standard)

	Gas pressure PSI (kg/cm^{2}G)	Outlet air temperature (°F)
Cooling Mode	130.53 ~ 174.04 (9 ~ 12)	53.6 ~ 60.8
Heating Mode	333.58 ~ 420.60 (23 ~ 29)	96.8 ~ 113

*Condition:
- Indoor fan speed; High
- Outdoor temperature 95°F at cooling mode and 44.6°F at heating mode
- Compressor operates at rated frequency

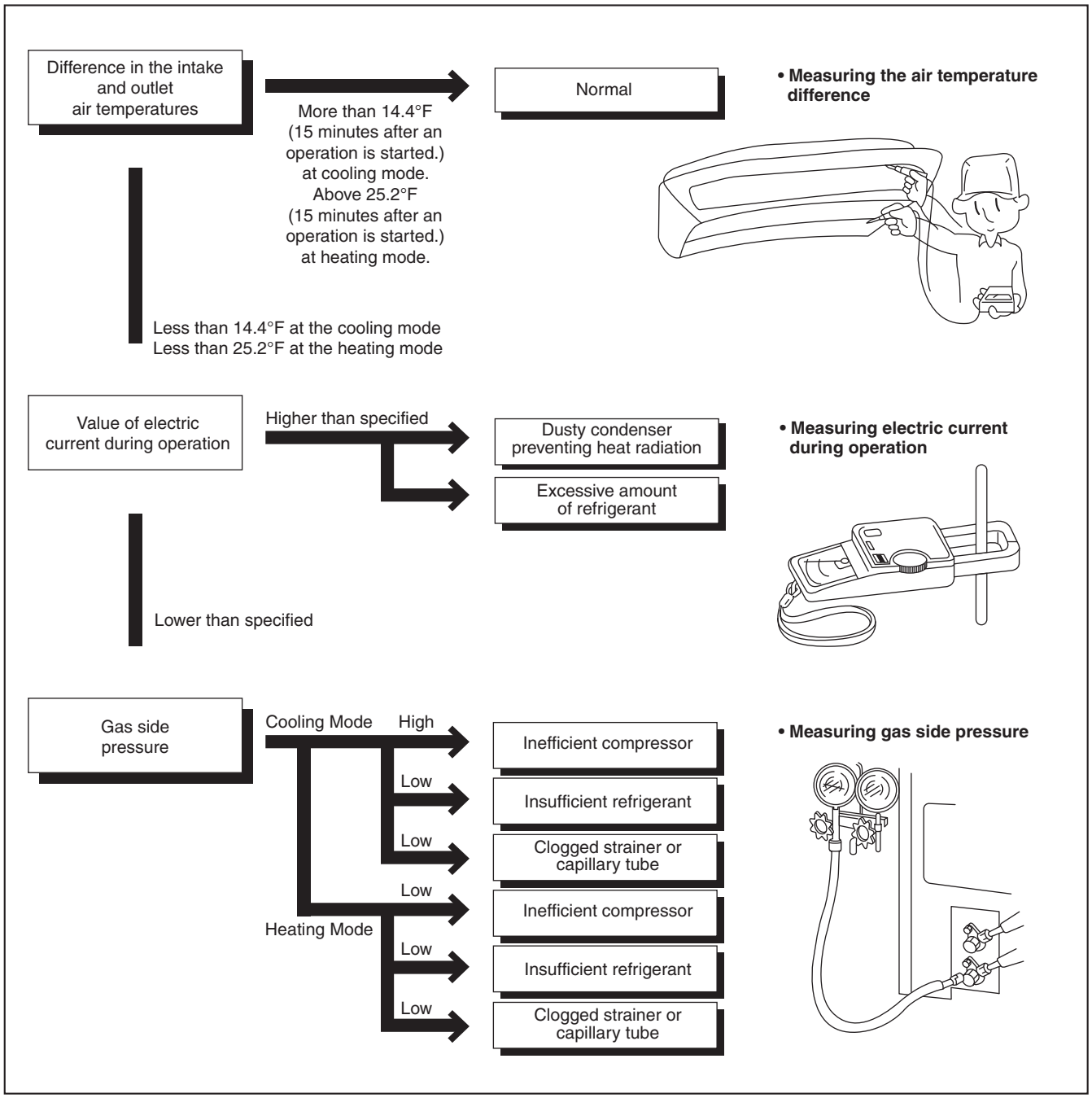

15.2 Relationship Between the Condition of the Air Conditioner and Pressure and Electric Current

Condition of the air conditioner	Cooling Mode			Heating Mode		
	Low Pressure	High Pressure	Electric current during operation	Low Pressure	High Pressure	Electric current during operation
Insufficient refrigerant (gas leakage)	↘	↘	↘	↘	↘	↘
Clogged capillary tube or Strainer	↘	↘	↘	↗	↗	↗
Short circuit in the indoor unit	↘	↘	↘	↗	↗	↗
Heat radiation deficiency of the outdoor unit	↗	↗	↗	↘	↘	↘
Inefficient compression	↗	↘	↘	↗	↘	↘

- Carry out the measurement of pressure, electric current, and temperature fifteen minutes after an operation is started.

15.3 Breakdown Self Diagnosis Function

15.3.1 Self Diagnosis Function (Three Digits Alphanumeric Code)

- Once abnormality has occurred during operation, the unit will stop its operation, and OFF/ON operation LED OFF.
- OFF indicator does not shown on remote control display.
- In operation after breakdown repair, the last error code abnormality will be stored in EEPROM.
- **To make a diagnosis**
  1 OFF/ON operation LED OFF and the unit automatically stops the operation, but the OFF indicator does not shown.
  2 Press CHECK button continuously for 5 seconds.
  3 “- -” will be displayed on the remote controller display.
  4 Press timer ▲ or ▼ button on the remote control. The error code “H00” (no abnormality) will be displayed.
  5 Every press of the button (▲ or ▼) will increase the error code number.
  6 When the displayed error code matches the unit's error code, OFF/ON operation LED will be ON continuously.
  7 The breakdown diagnosis mode will be cancelled by pressing CHECK button continuously for 5 seconds or wait for 30 seconds.

- **AC Reset button**
  When AC Reset button is pressed, the error code will be reset so that the unit will be able to operate and recheck if any error occurred.

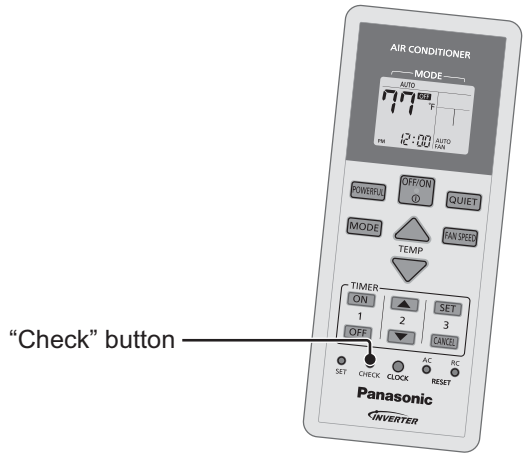

- **To display memorized error status:**
  1 Turn ON the power supply.
  2 Press CHECK button continuously for 5 seconds.
  3 “- -” will be displayed on the remote controller display.
  4 Press timer ▲ or ▼ button on the remote control. The error code "H00" (no abnormality) will be displayed.
  5 Every press of the button (▲ or ▼) will increase the error code number.
  6 When the displayed error code matches the unit's error code, OFF/ON operation LED will be ON continuously.
  7 The breakdown diagnosis mode will be cancelled by pressing CHECK button continuously for 5 seconds or wait for 30 seconds.

15.4 Error Codes Table

Diagnosis display	Abnormality / Protection control	Abnormality Judgment	Emergency Operation	Primary location to verify
H00	No abnormality detected	–	Normal operation	–
H11	Indoor/outdoor abnormal communication	> 1 min. after starting operation	Indoor fan operation only	• Internal/external cable connections • Indoor/Outdoor PCB
H12	Connection capability rank abnormal	–	–	–
H14	Indoor intake air temperature sensor abnormality	Continue for 5 sec.	–	• Intake air temperature sensor (defective or disconnected)
H15	Outdoor compressor temperature sensor abnormality	Continue for 5 sec.	–	• Compressor temperature sensor (defective or disconnected)
H16	Outdoor Current Transformer open circuit	–	–	• Outdoor PCB • IPM (Power transistor) module
H19	Indoor fan motor mechanism lock	–	–	• Indoor PCB • Fan motor
H21	Indoor float switch operation abnormal	–	–	–
H23	Indoor heat exchanger temperature sensor 1 abnormality	Continue for 5 sec.	O (Cooling only)	• Heat exchanger temperature sensor 1 (defective or disconnected)
H24	Indoor heat exchanger temperature sensor 2 abnormality	Continue for 5 sec.	–	• Heat exchanger temperature sensor 2 (defective or disconnected)
H27	Outdoor air temperature sensor abnormality	Continue for 5 sec.	O	• Outdoor temperature sensor (defective or disconnected)
H28	Outdoor heat exchanger temperature sensor abnormality	Continue for 5 sec.	O	• Outdoor heat exchanger temperature sensor (defective or disconnected)
H30	Discharge temperature sensor abnormality	Continue for 5 sec.	–	• Discharge temperature sensor
H32	Outdoor heat exchanger temperature sensor 2 abnormality	Continue for 5 sec.	–	• Discharge pipe temperature sensor (defective or disconnected).
H34	Outdoor heat sink temperature sensor abnormality	Continue for 2 sec.	–	• Outdoor heat sink temperature sensor (defective or disconnected).
H35	Indoor drain water adverse current abnormal	–	–	–
H36	Gas pipe temperature sensor abnormality	Continue for 5 sec.	–	• Gas pipe temperature sensor (defective or disconnected).
H37	Outdoor liquid pipe temperature sensor abnormality	Continue for 2 sec.	–	• Outdoor liquid pipe temperature sensor (defective or disconnected).
H39	Abnormal indoor operating unit or standby units	–	–	–
H41	Wiring or piping connection abnormality	3 minutes after compressor start up	–	–
H97	Outdoor Fan Motor lock abnormality	2 times occurrence within 30 minutes	–	• Outdoor PCB • Outdoor Fan Motor
H98	Indoor high pressure protection	–	–	• Air filter dirty • Air circulation short circuit
H99	Indoor heat exchanger anti-freezeing protection	–	–	• Insufficient refrigerant • Air filter dirty
F11	Cooling / Heating cycle changeover abnormality	4 times occurrence within 30 minutes	–	• 4-way valve • V-coil
F17	Indoor unit freezing error	3 times occurrence within 30 minutes	–	• Expansion valve leakage • Indoor unit pipe temperature sensor (check for changes in characteristics and check its resistance)
F90	PFC control	4 times occurrence within 10 minutes	–	• Voltage at PFC
F91	Refrigeration cycle abnormality	2 times occurrence within 20 minutes	–	• No refrigerant (3-way valve is closed)
F93	Outdoor compressor abnormal revolution	4 times occurrence within 20 minutes	–	• Outdoor compressor
F95	Cool high pressure protection	4 times occurrence within 20 minutes	–	• Outdoor refrigerant circuit
F96	IPM (power transistor) overheating protection	–	–	• Excess refrigerant • Improper heat radiation • IPM (Power transistor)
F97	Outdoor compressor overheating protection	4 times occurrence within 20 minutes	–	• Insufficient refrigerant • Compressor

Diagnosis display	Abnormality / Protection control	Abnormality Judgment	Emergency Operation	Primary location to verify
F98	Total running current protection	3 times occurrence within 20 minutes	–	• Excess refrigerant • Improper heat radiation
F99	Outdoor Direct Current (DC) peak detection	7 times occurrence continuously	–	• Outdoor PCB • IPM (Power transistor) • Compressor

Note:
"O" - Frequency measured and fan speed fixed.

The memory data of error code is erased when the power supply is cut off, or press the Auto Switch until "beep" sound heard following by pressing the "CHECK" button at Remote Control.
Although operation forced to stop when abnormality detected, emergency operation is possible for certain errors (refer to Error Codes Table) by using Remote Control or Auto Switch at indoor unit. However, the Remote Control signal receiving sound is changed from one "beep" to four "beep" sounds.

15.5 Self-diagnosis Method

15.5.1 H11 (Indoor/Outdoor Abnormal Communication)

Malfunction Decision Conditions

- During startup and operation of cooling and heating, the data received from outdoor unit in indoor unit signal transmission is checked whether it is normal.

Malfunction Caused

- Faulty indoor unit PCB.
- Faulty outdoor unit PCB.
- Indoor unit-outdoor unit signal transmission error due to wiring error.
- Indoor unit-outdoor unit signal transmission error due to breaking of wire in the connection wires between the indoor and outdoor units.

Troubleshooting

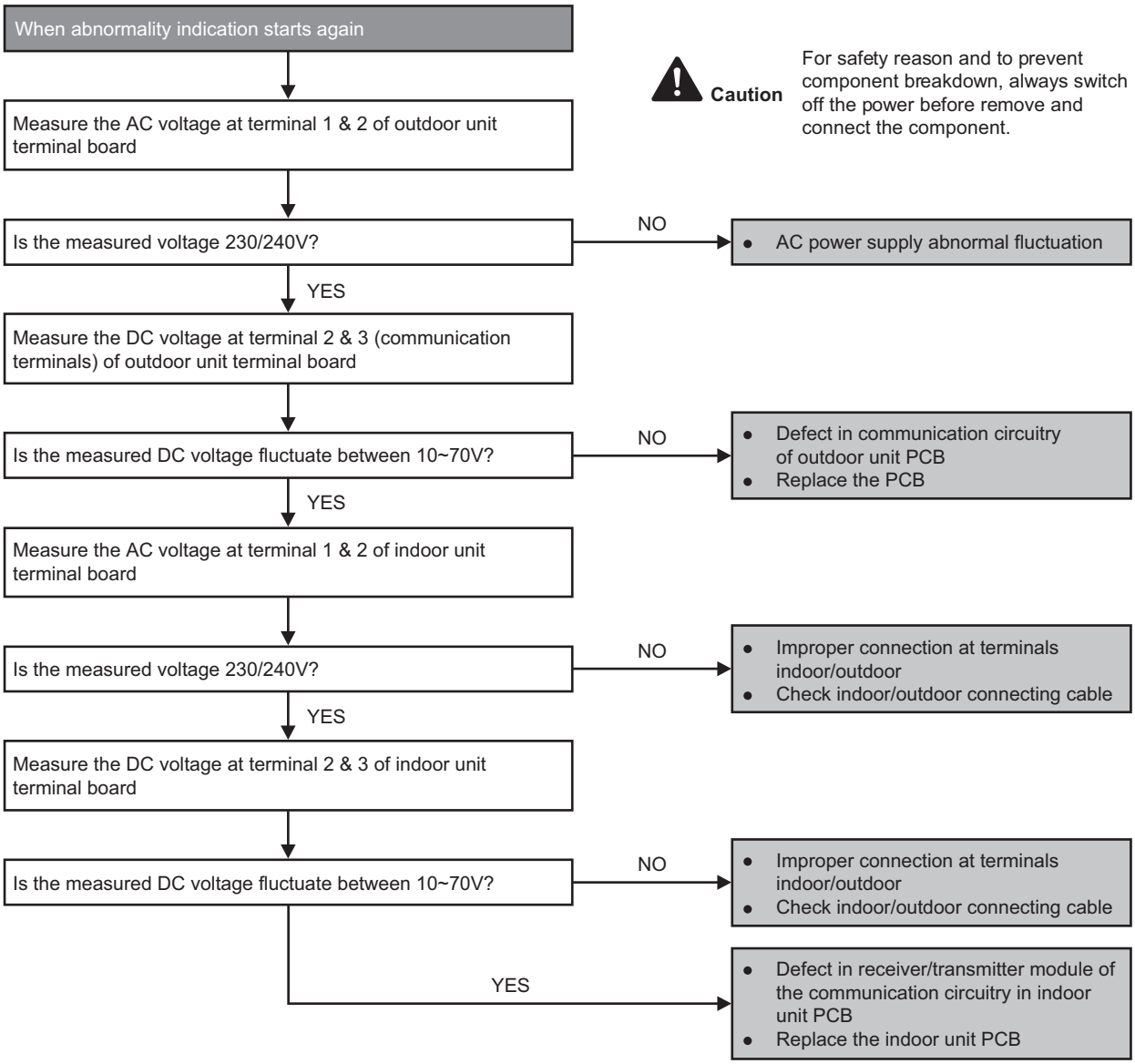

15.5.2 H12 (Indoor/Outdoor Capacity Rank Mismatched)

Malfunction Decision Conditions

- During startup, error code appears when different types of indoor and outdoor units are interconnected.

Malfunction Caused

- Wrong models interconnected.
- Wrong indoor unit or outdoor unit PCBs mounted.
- Indoor unit or outdoor unit PCBs defective.
- Indoor-outdoor unit signal transmission error due to wrong wiring.
- Indoor-outdoor unit signal transmission error due to breaking of wire 3 in the connection wires between the indoor and outdoor units.

Troubleshooting

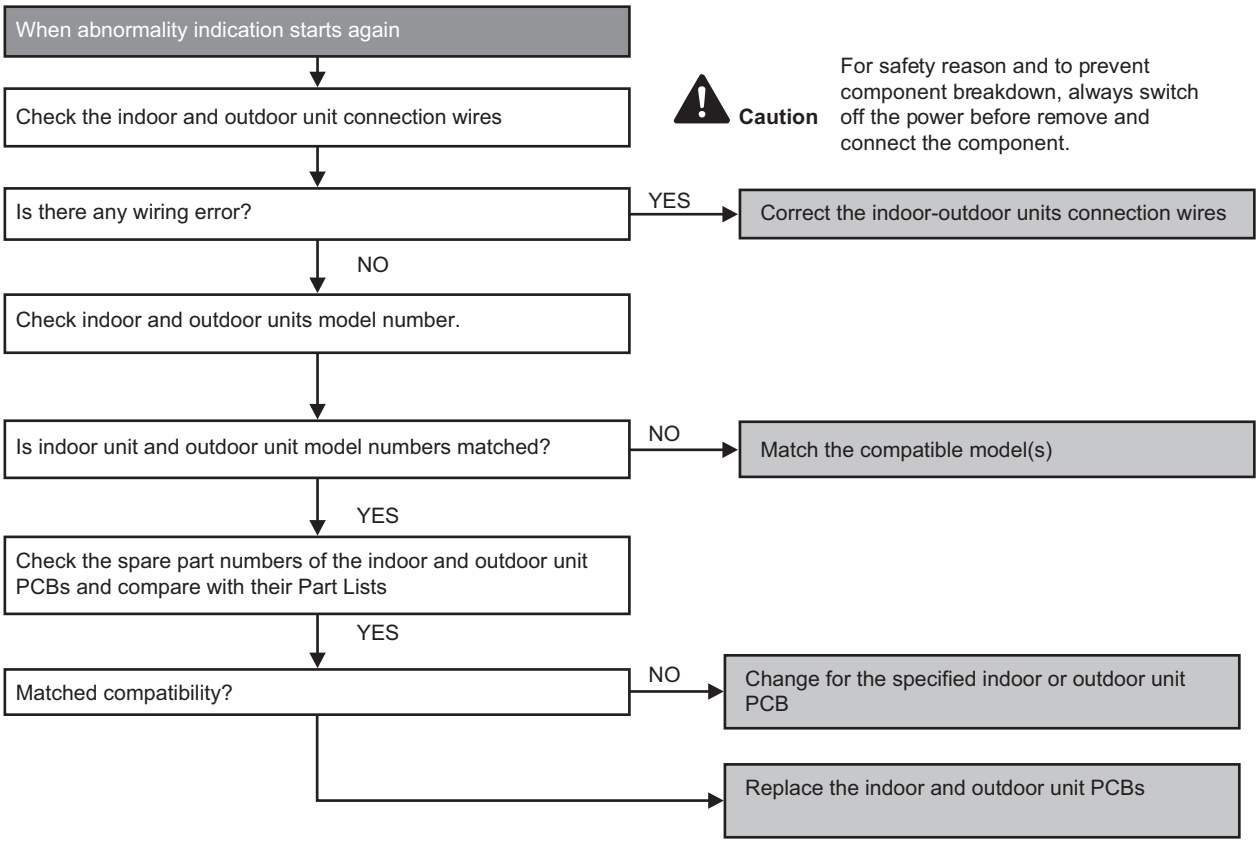

15.5.3 H14 (Indoor Intake Air Temperature Sensor Abnormality)

Malfunction Decision Conditions

- During startup and operation of cooling and heating, the temperatures detected by the indoor intake air temperature sensor are used to determine sensor errors.

Malfunction Caused

- Faulty connector connection.
- Faulty sensor.
- Faulty PCB.

Troubleshooting

When abnormality indication starts again

↓

Check the connector connection:
- Turn off the power
- Check the connector connection

Caution For safety reason and to prevent component breakdown, always switch off the power before remove and connect the component.

↓

Is the connector connection normal?

NO →
- Connector poor contact
- Correct the connection

YES ↓

Check the indoor intake air temperature sensor:
- Plug out connector from the indoor unit PCB
- Measure the resistance of the indoor intake air temperature sensor

↓

Is the measured resistance of the indoor intake air temperature sensor matches the value specified in its characteristic chart?

NO →
- Defect in indoor intake air tempeature sensor
- Replace the indoor intake air temperature sensor

YES →
- Defect in indoor unit PCB
- Replace the indoor unit PCB

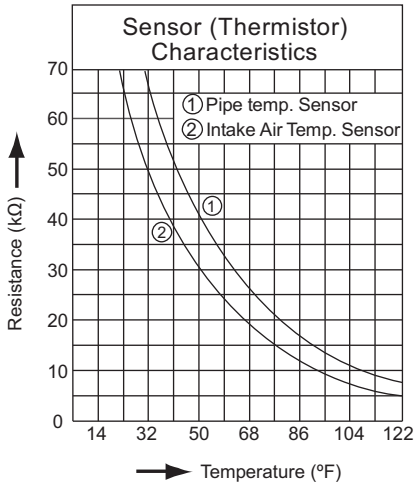

15.5.4 H15 (Compressor Temperature Sensor Abnormality)

Malfunction Decision Conditions

- During startup and operation of cooling and heating, the temperatures detected by the outdoor compressor temperature sensor are used to determine sensor errors.

Malfunction Caused

- Faulty connector connection.
- Faulty sensor.
- Faulty PCB.

Troubleshooting

When abnormality indication starts again

Check the connector connection:
- Turn off the power
- Check the connector connection

Caution For safety reason and to prevent component breakdown, always switch off the power before remove and connect the component.

Is the connector connection normal?

NO →
- Connector poor contact
- Correct the connection

YES ↓

Check the outdoor compressor temperature sensor:
- Plug out connector from the outdoor unit PCB
- Measure the resistance of the outdoor compressor temperature sensor

Is the measured resistance of the outdoor compressor temperature sensor matches the value specified in its characteristic chart?

NO →
- Defect in outdoor compressor temperature sensor
- Replace the outdoor compressor temperature sensor

YES →
- Defect in outdoor unit PCB
- Replace the outdoor unit PCB

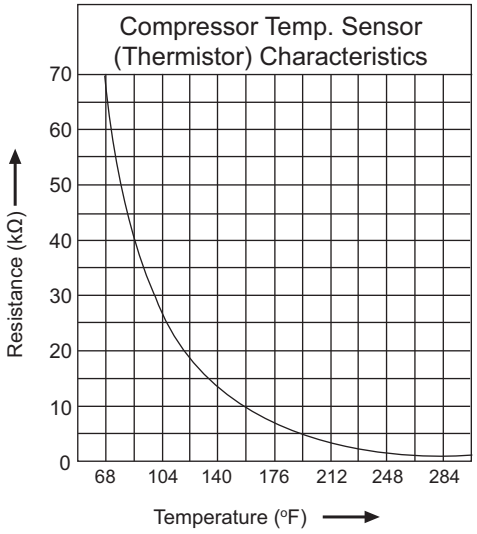

15.5.5 H16 (Outdoor Current Transformer)

Malfunction Decision Conditions

- An input current, detected by Current Transformer CT, is below threshold value when the compressor is operating at certain frequency value for 3 minutes.

Malfunction Caused

- Lack of gas
- Broken CT (current transformer)
- Broken Outdoor PCB

Troubleshooting

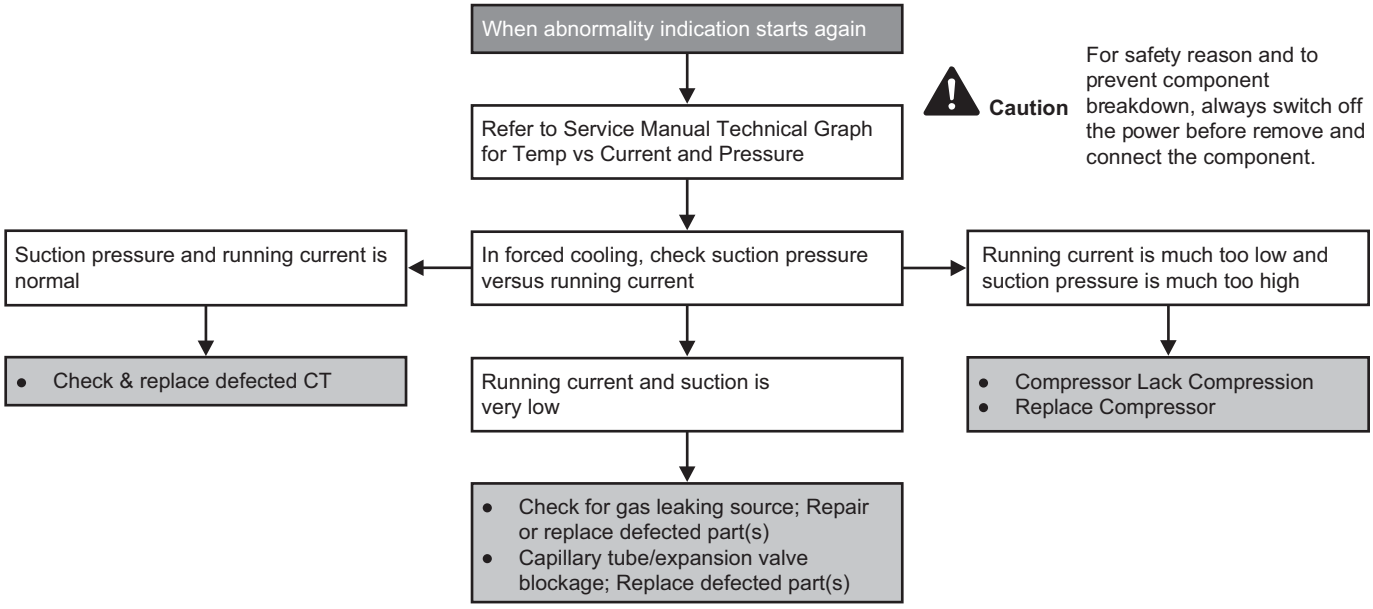

15.5.6 H19 (Indoor Fan Motor – DC Motor Mechanism Locked)

Malfunction Decision Conditions

- The rotation speed detected by the Hall IC during fan motor operation is used to determine abnormal fan motor (feedback of rotation > 2550 rpm or < 50 rpm)

Malfunction Caused

- Operation stops due to short circuit inside the fan motor winding.
- Operation stops due to breaking of wire inside the fan motor.
- Operation stops due to breaking of fan motor lead wires.
- Operation stops due to Hall IC malfunction.
- Operation error due to faulty indoor unit PCB.

Troubleshooting

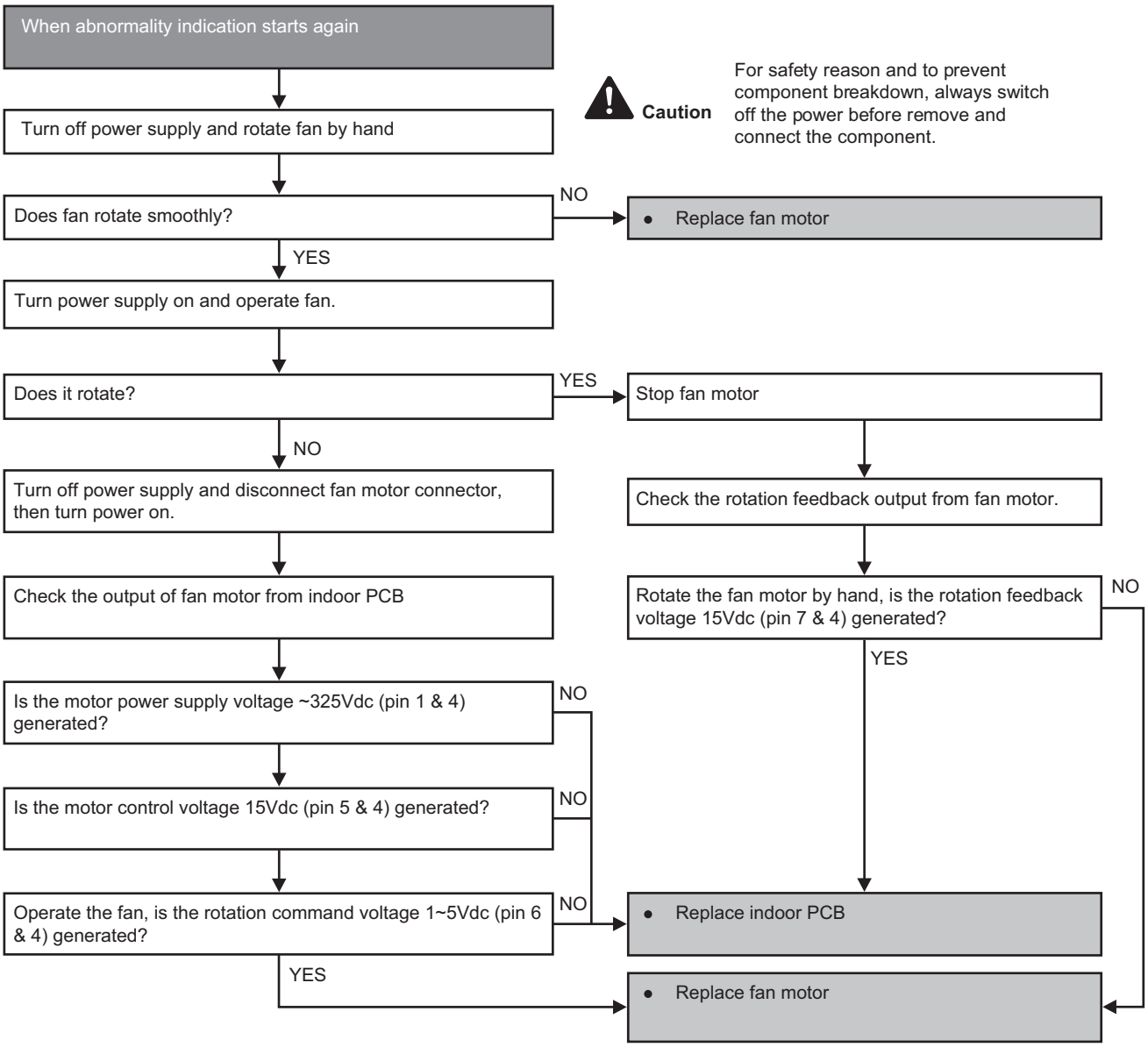

15.5.7 H23 (Indoor Pipe Temperature Sensor Abnormality)

Malfunction Decision Conditions

- During startup and operation of cooling and heating, the temperatures detected by the indoor heat exchanger temperature sensor are used to determine sensor errors.

Malfunction Caused

- Faulty connector connection.
- Faulty sensor.
- Faulty PCB.

Troubleshooting

When abnormality indication starts again

↓

Check the connector connection:
- Plug out connector from the indoor unit PCB
- Measure the resistance of the indoor pipe temperature sensor

Caution For safety reason and to prevent component breakdown, always switch off the power before remove and connect the component.

↓

Is the connector connection normal?

NO →
- Connector poor contact
- Correct the connection

YES ↓

Check the outdoor air temperature sensor:
- Plug out connector from the outdoor unit PCB
- Measure the resistance of the outdoor intake air temperature sensor

↓

Is the measured resistance of the outdoor intake air temperature sensor matches the value specified in its characteristic chart?

NO →
- Defect in outdoor intake air temperature sensor
- Replace the outdoor intake air temperature sensor

YES →
- Defect in outdoor unit PCB
- Replace the outdoor unit PCB

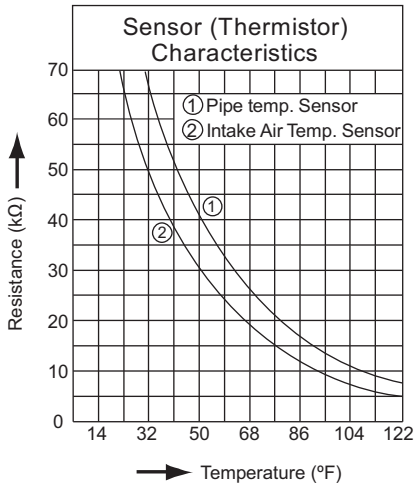

15.5.8 H24 (Indoor Pipe Temperature Sensor 2 Abnormality)

Malfunction Decision Conditions

- During startup and operation of cooling and heating, the temperatures detected by the indoor heat exchanger temperature sensor 2 are used to determine sensor errors.

Malfunction Caused

- Faulty connector connection.
- Faulty sensor.
- Faulty PCB.

Troubleshooting

When abnormality indication starts again

↓

Check the connector connection:
- Plug out connector from the indoor unit PCB
- Measure the resistance of the indoor pipe temperature sensor

Caution For safety reason and to prevent component breakdown, always switch off the power before remove and connect the component.

↓

Is the connector connection normal?

NO →
- Connector poor contact
- Correct the connection

YES ↓

Check the outdoor air temperature sensor:
- Plug out connector from the outdoor unit PCB
- Measure the resistance of the outdoor intake air temperature sensor

↓

Is the measured resistance of the outdoor intake air temperature sensor matches the value specified in its characteristic chart?

NO →
- Defect in outdoor intake air temperature sensor
- Replace the outdoor intake air temperature sensor

YES →
- Defect in outdoor unit PCB
- Replace the outdoor unit PCB

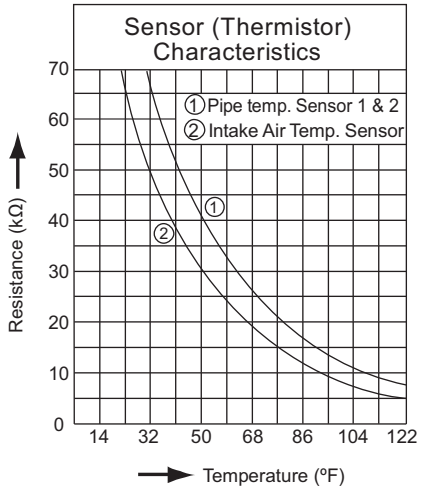

15.5.9 H27 (Outdoor Air Temperature Sensor Abnormality)

Malfunction Decision Conditions

- During startup and operation of cooling and heating, the temperatures detected by the outdoor air temperature sensor are used to determine sensor errors.

Malfunction Caused

- Faulty connector connection.
- Faulty sensor.
- Faulty PCB.

Troubleshooting

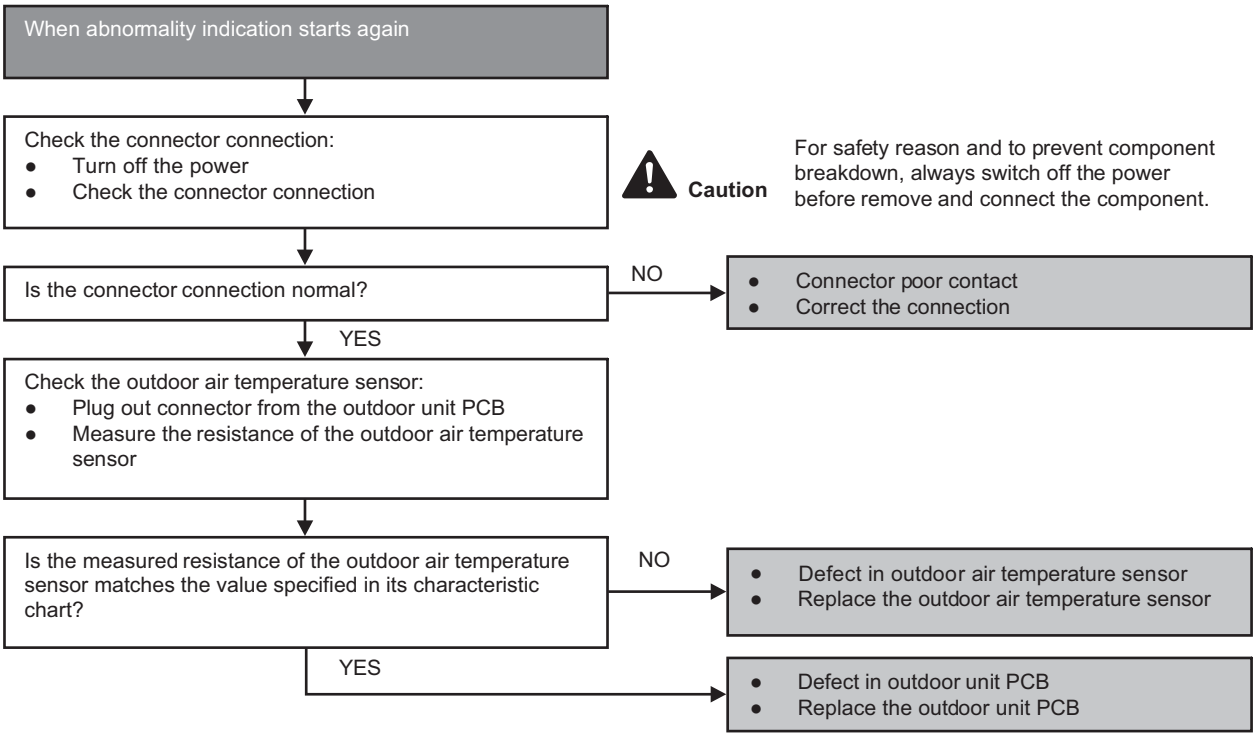

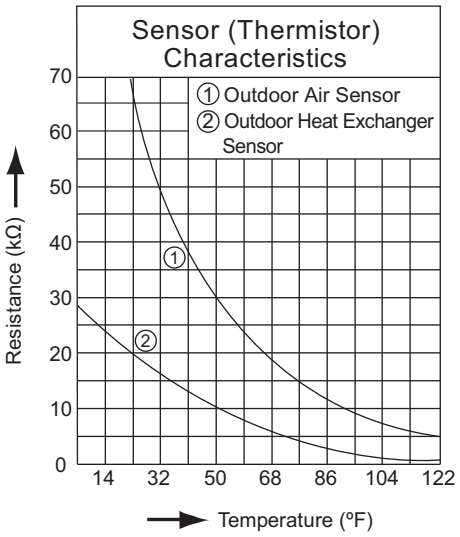

15.5.10 H28 (Outdoor Pipe Temperature Sensor Abnormality)

Malfunction Decision Conditions

- During startup and operation of cooling and heating, the temperatures detected by the outdoor pipe temperature sensor are used to determine sensor errors.

Malfunction Caused

- Faulty connector connection.
- Faulty sensor.
- Faulty PCB.

Troubleshooting

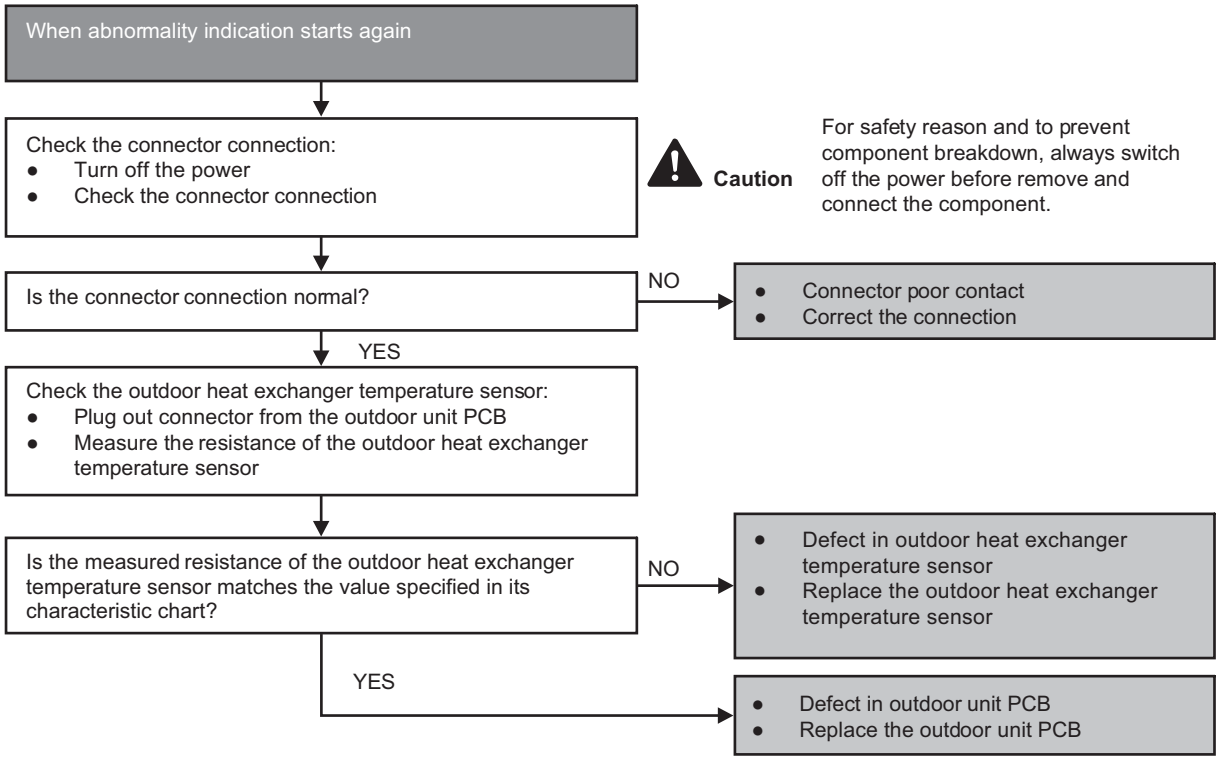

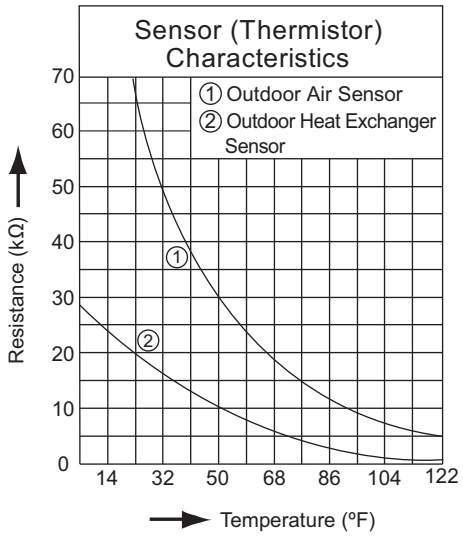

15.5.11 H30 (Compressor Discharge Temperature Sensor Abnormality)

Malfunction Decision Conditions

- During startup and operation of cooling and heating, the temperatures detected by the outdoor discharge pipe temperature sensor are used to determine sensor errors.

Malfunction Caused

- Faulty connector connection.
- Faulty sensor.
- Faulty PCB.

Troubleshooting

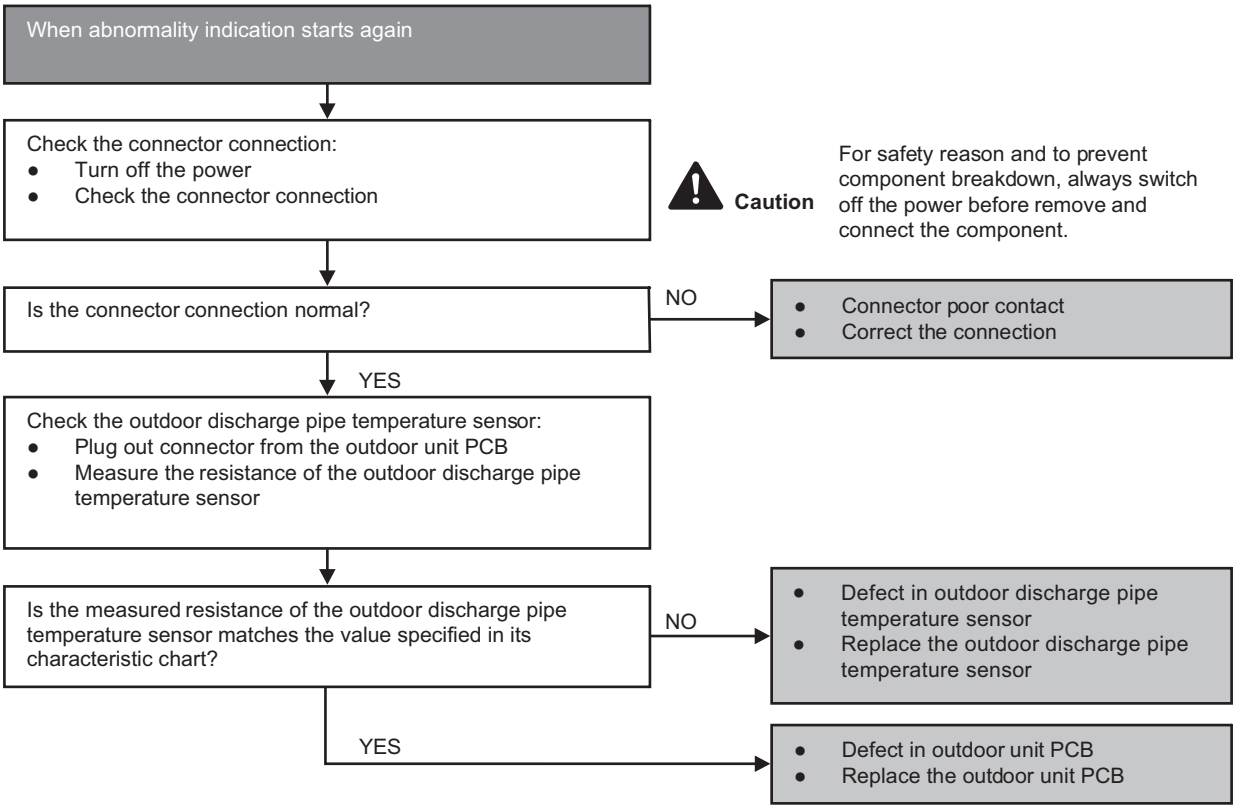

15.5.12 H33 (Unspecified Voltage between Indoor and Outdoor)

Malfunction Decision Conditions

- The supply power is detected for its requirement by the indoor/outdoor transmission.

Malfunction Caused

- Wrong models interconnected.
- Wrong indoor unit and outdoor unit PCBs used.
- Indoor unit or outdoor unit PCB defective.

Troubleshooting

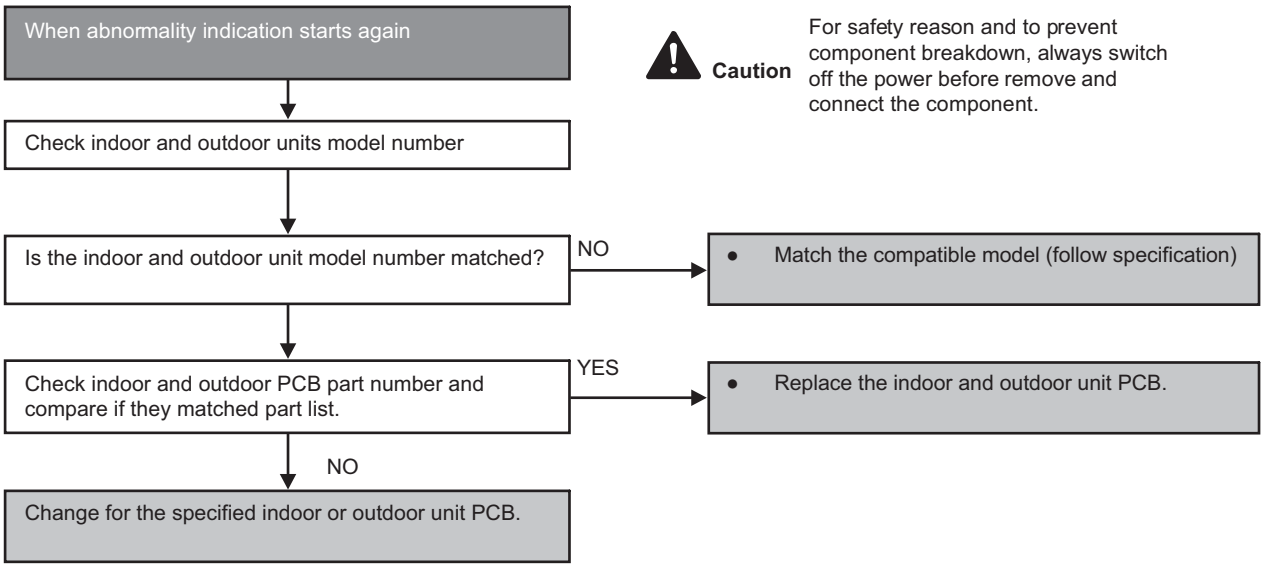

15.5.13 H97 (Outdoor Fan Motor – DC Motor Mechanism Locked)

Malfunction Decision Conditions

- The rotation speed detected by the Hall IC during fan motor operation is used to determine abnormal fan motor.

Malfunction Caused

- Operation stops due to short circuit inside the fan motor winding.
- Operation stops due to breaking of wire inside the fan motor.
- Operation stops due to breaking of fan motor lead wires.
- Operation stops due to Hall IC malfunction.
- Operation error due to faulty outdoor unit PCB.

Troubleshooting

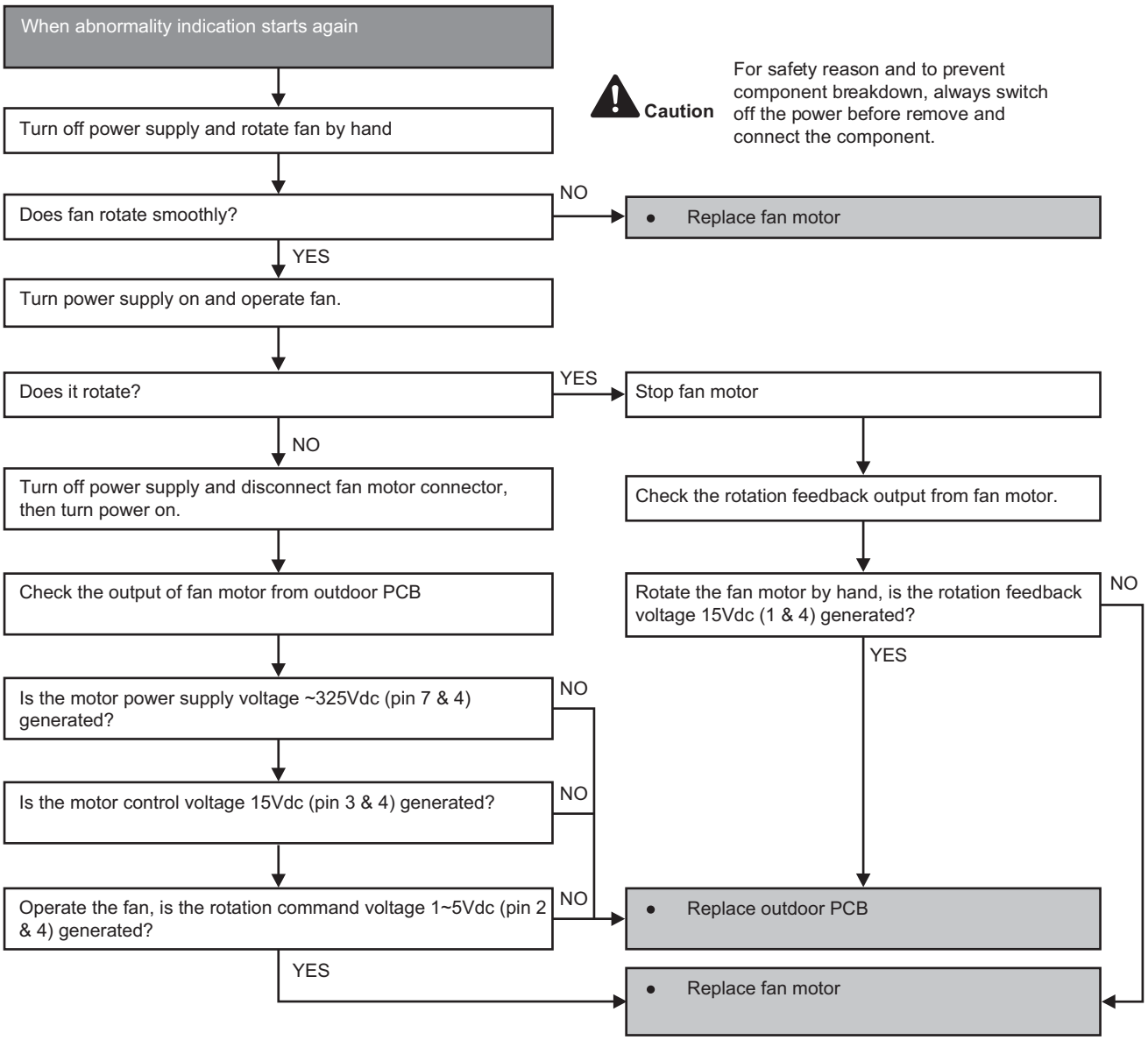

15.5.14 H98 (Error Code Stored in Memory and no alarm is triggered / no TIMER LED flashing)

Malfunction Decision Conditions

- Indoor high pressure is detected when indoor heat exchanger is detecting very high temperature when the unit is operating in heating operation.
- Phenomena: unit is stopping and re-starting very often in heating mode.

Malfunction Caused

- Indoor heat exchanger thermistor
- Clogged air filter or heat exchanger
- Over-bent pipe (liquid side)

Troubleshooting

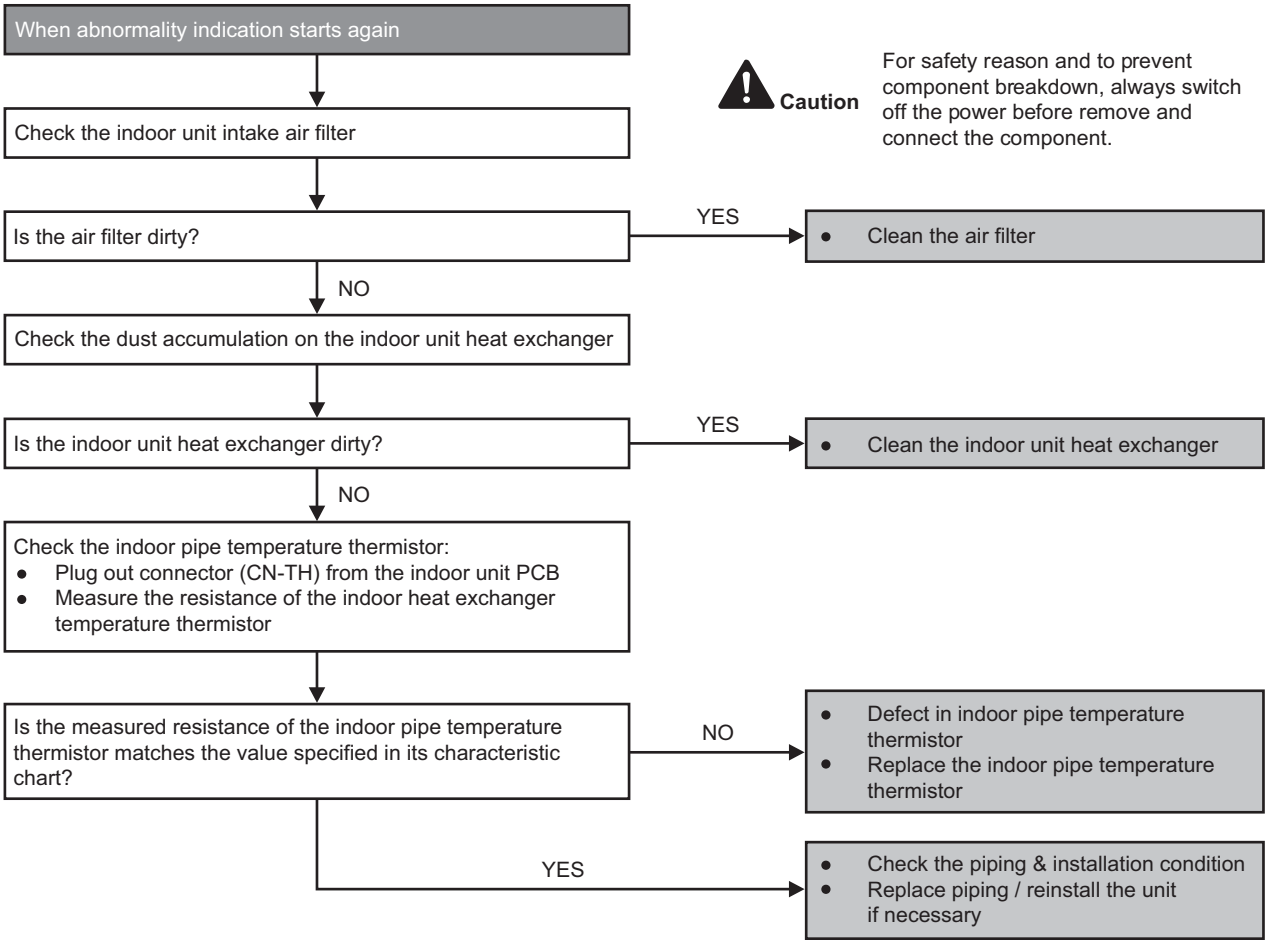

15.5.15 H99 (Indoor Freeze Prevention Protection: Cooling or Soft Dry)

Error Code will not display (no Timer LED blinking) but store in EEPROM

Malfunction Decision Conditions

- Freeze prevention control takes place (when indoor pipe temperature is lower than 35.6°F)

Malfunction Caused

- Air short circuit at indoor unit
- Clogged indoor unit air filter
- Dust accumulation on the indoor unit heat exchanger
- 2/3 way valve closed
- Faulty indoor unit fan motor
- Refrigerant shortage (refrigerant leakage)
- Clogged expansion valve or strainer
- Faulty indoor pipe temperature sensor
- Faulty indoor unit PCB

Troubleshooting

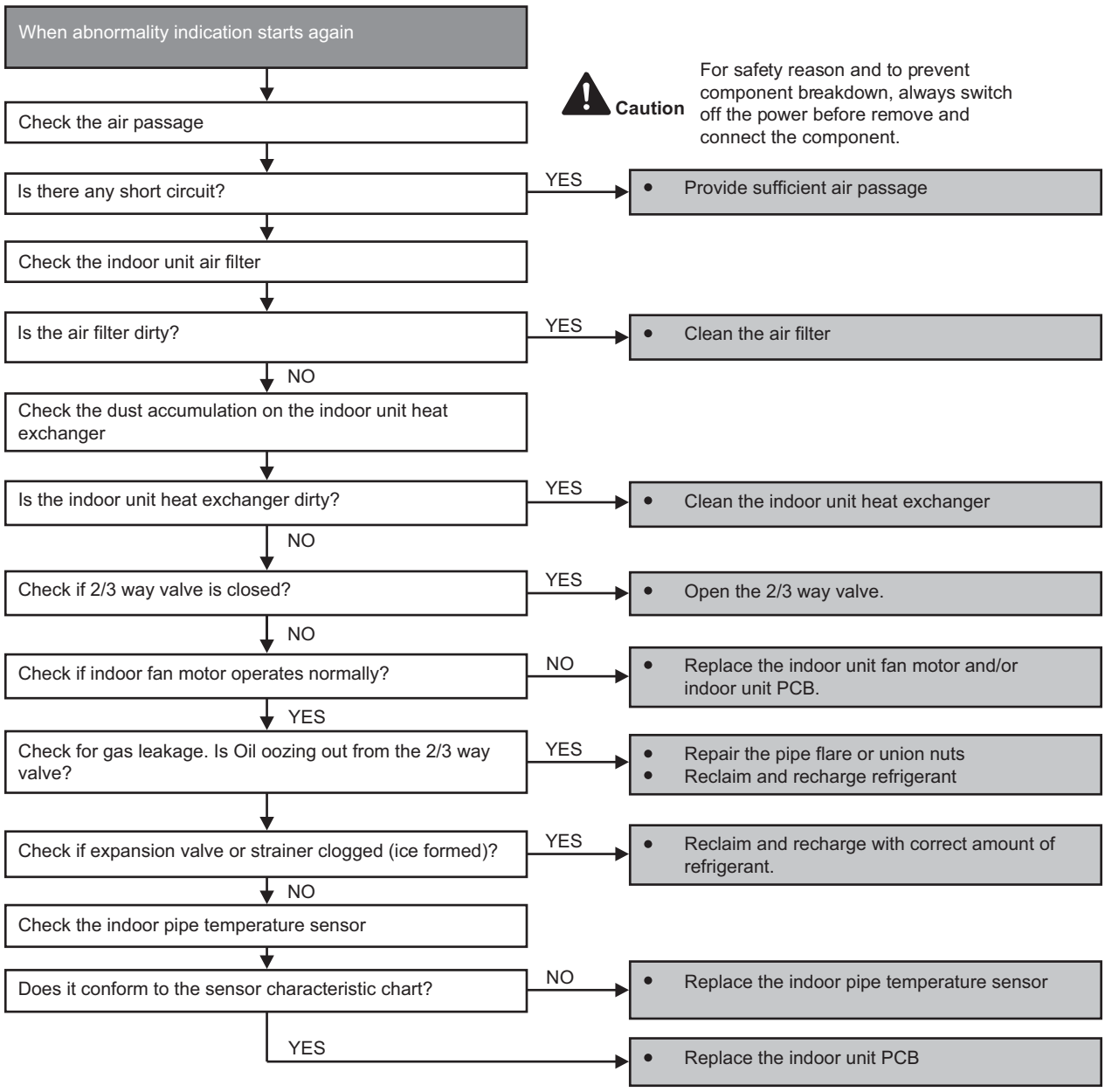

15.5.16 F11 (4-way Valve Switching Failure)

Malfunction Decision Conditions

- When indoor heat exchanger is cold during heating (except deice) or when indoor heat exchanger is hot during cooling and compressor operating, the 4-way valve is detected as malfunction.

Malfunction Caused

- Indoor heat exchanger (pipe) thermistor
- 4-way valve malfunction

Troubleshooting

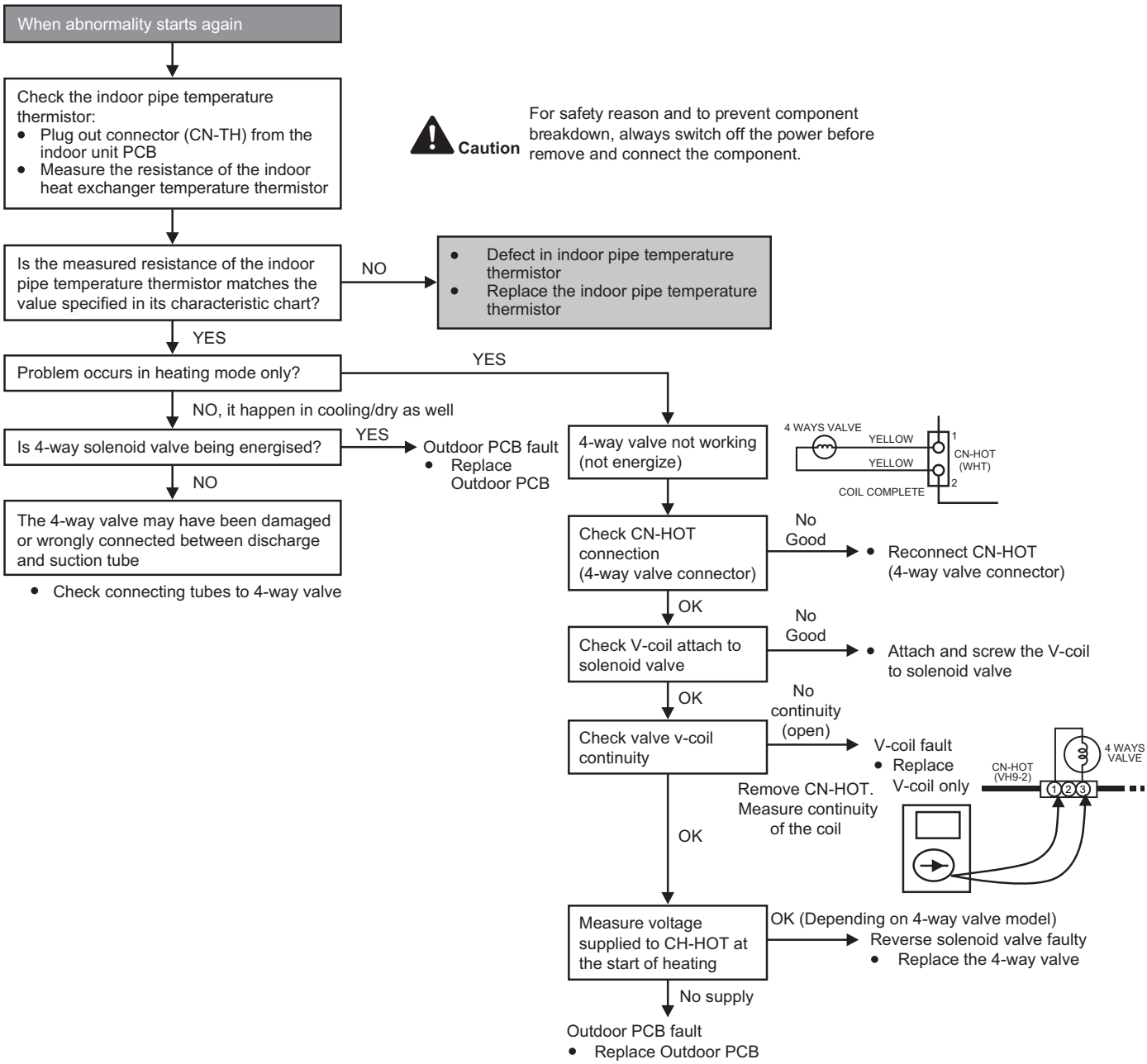

* Check gas side pipe – for hot gas flow in cooling mode

15.5.17 F90 (Power Factor Correction Protection)

Malfunction Decision Conditions

- To maintain DC voltage level supply to power transistor.
- To detect high DC voltage level after rectification.

Malfunction Caused

- During startup and operation of cooling and heating, when Power Factor Correction (PFC) protection circuitry at the outdoor unit main PCB senses abnormal DC voltage level for power transistors.
- When DC voltage detected is LOW, transistor switching will turn ON by controller to push-up the DC level.
- When DC voltage detected is HIGH (391Vdc – 425Vdc), active LOW signal will send by the controller to turn OFF relay RY-C.

Troubleshooting

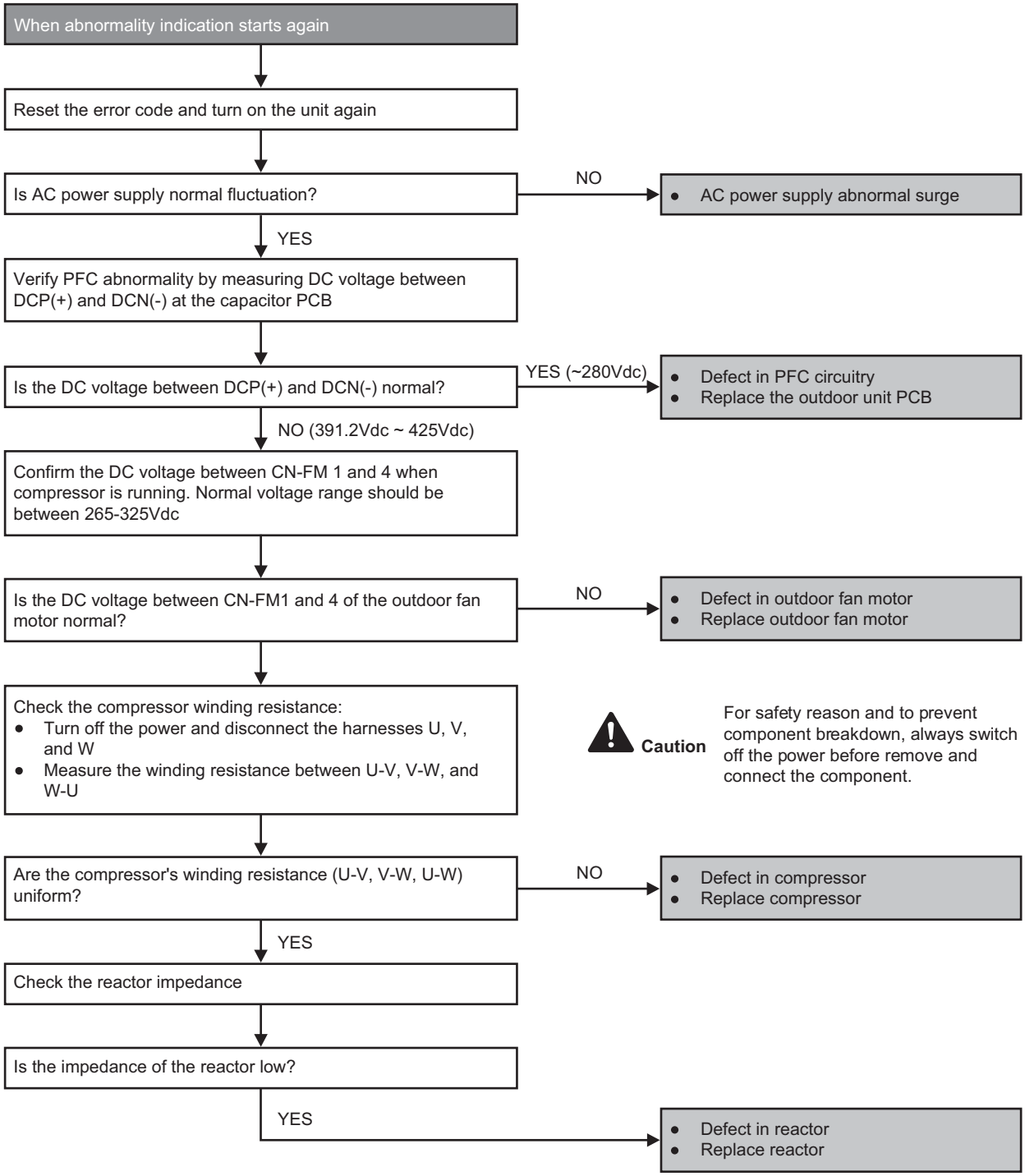

15.5.18 F91 (Refrigeration Cycle Abnormality)

Malfunction Decision Conditions

- The input current is low while the compressor is running at higher than the setting frequency.

Malfunction Caused

- Lack of gas.
- 3-way valve close.

Troubleshooting

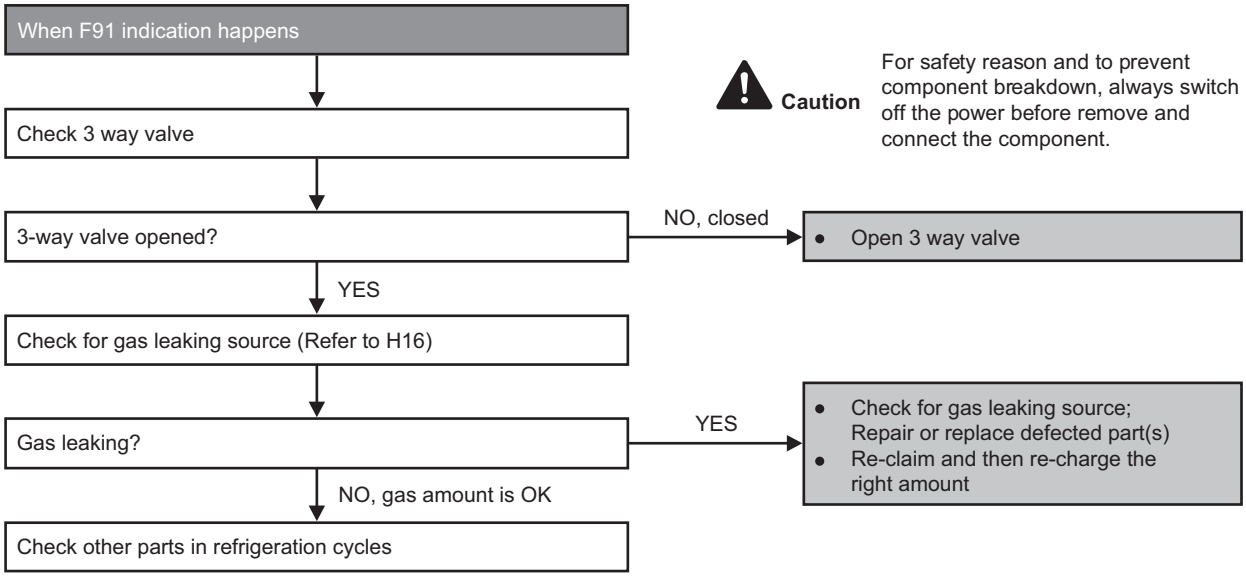

15.5.19 F93 (Compressor Rotation Failure)

Malfunction Decision Conditions

- A compressor rotation failure is detected by checking the compressor running condition through the position detection circuit.

Malfunction Caused

- Compressor terminal disconnect
- Faulty Outdoor PCB
- Faulty compressor

Troubleshooting

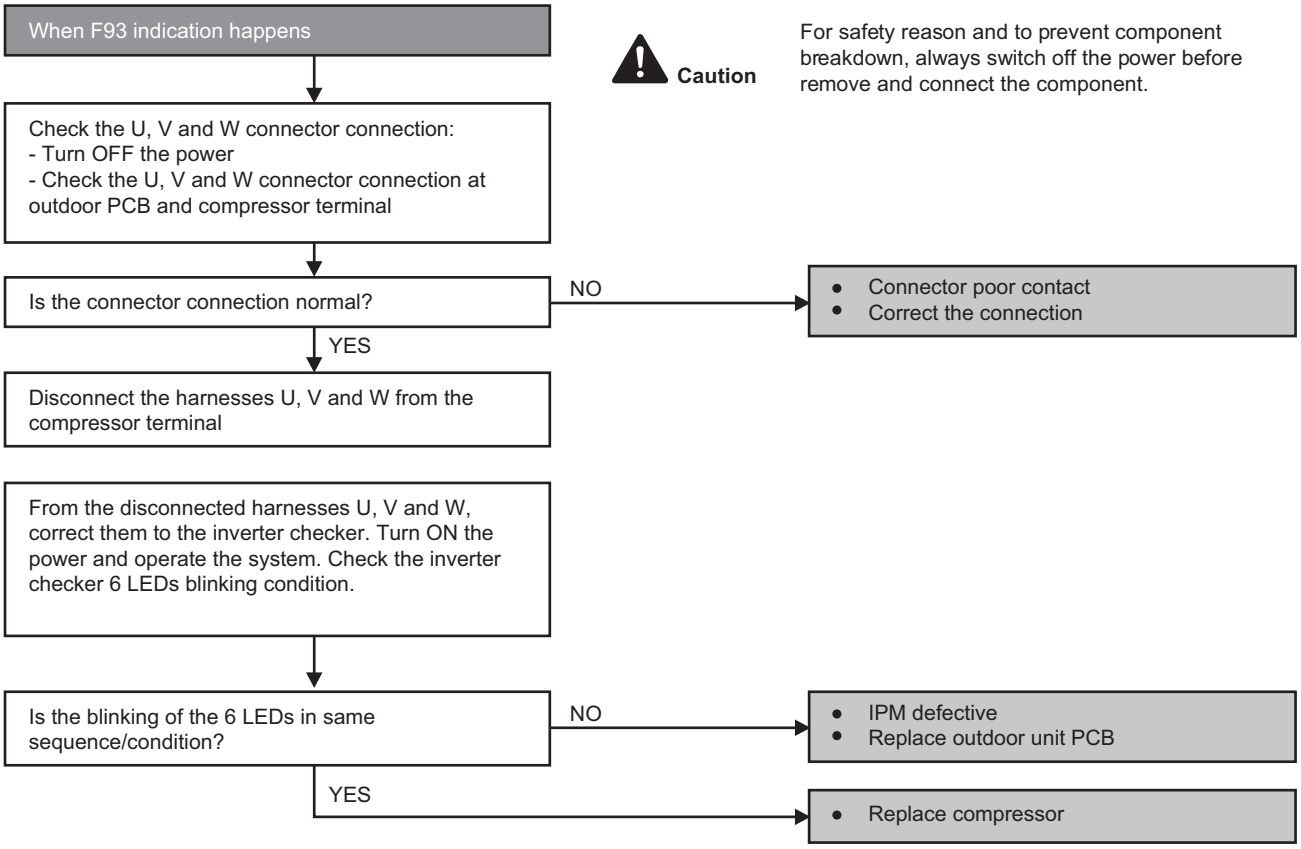

15.5.20 F95 (Outdoor High Pressure Protection: Cooling or Soft Dry)

Malfunction Decision Conditions

- During operation of cooling or soft dry, when outdoor unit heat exchanger high temperature data is detected by the outdoor unit heat exchanger thermistor.

Malfunction Caused

- Outdoor heat exchanger temperature rise due to short-circuit of hot discharge air flow.
- Outdoor heat exchanger temperature rise due to defective of outdoor fan motor.
- Outdoor heat exchange temperature rise due to defective outdoor heat exchanger thermistor.
- Outdoor heat exchanger temperature rise due to defective of outdoor unit PCB.

Troubleshooting

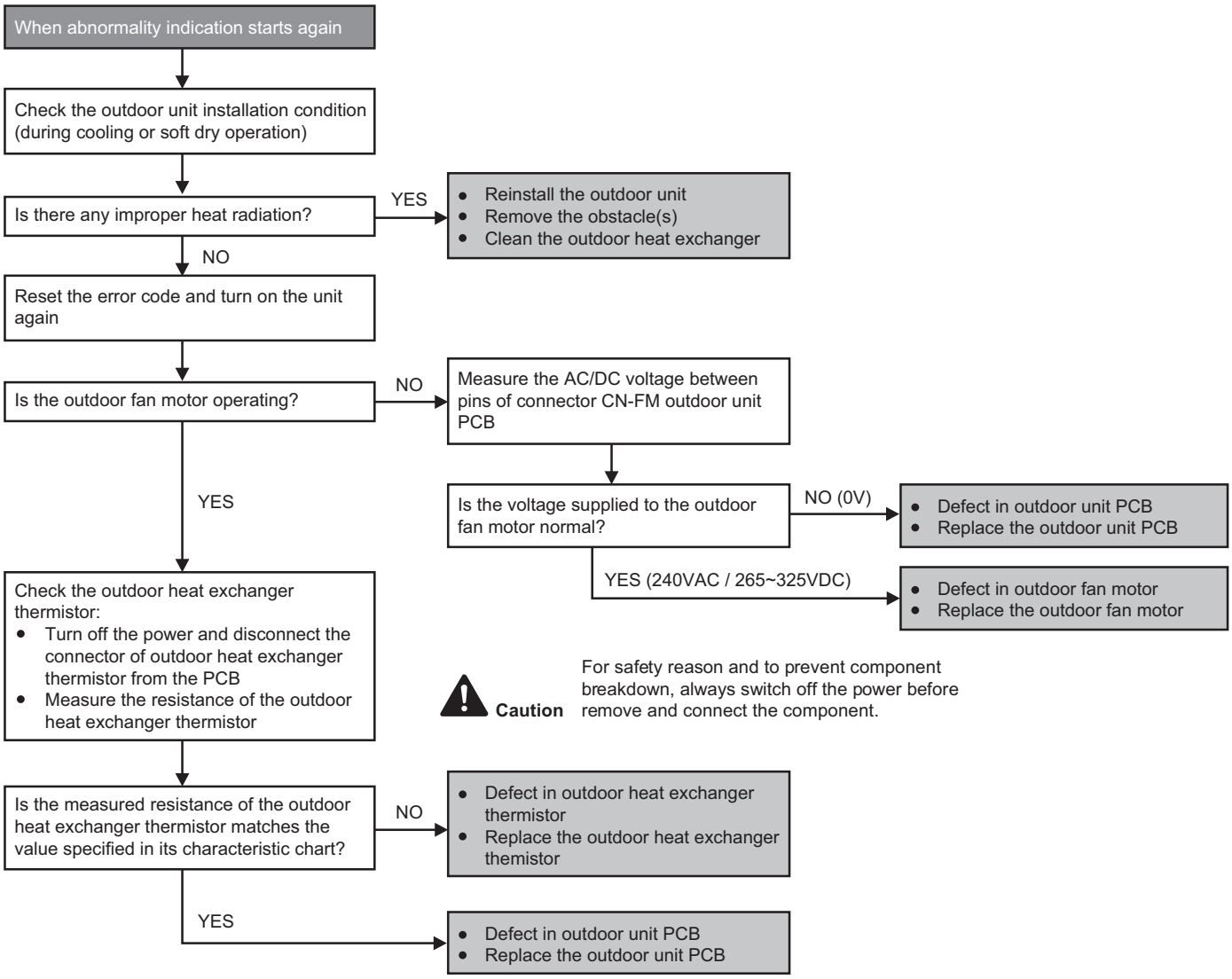

15.5.21 F96 (IPM Overheating)

Malfunction Decision Conditions

- During operating of cooling and heating, when IPM temperature data (212°F) is detected by the IPM temperature sensor.
  Multi Models only
  - Compressor Overheating: During operation of cooling and heating, when the compressor OL is activated.
  - Heat Sink Overheating: During operation of cooling and heating, when heat sink temperature data (194°F) is detected by the heat sink temperature sensor.

Malfunction Caused

- IPM overheats due to short circuit of hot discharge air flow.
- IPM overheats due to defective of outdoor fan motor.
- IPM overheats due to defective of internal circuitry of IPM.
- IPM overheats due to defective IPM temperature sensor.
  Multi Models Only
  - Compressor OL connector poor contact.
  - Compressor OL faulty.

Troubleshooting

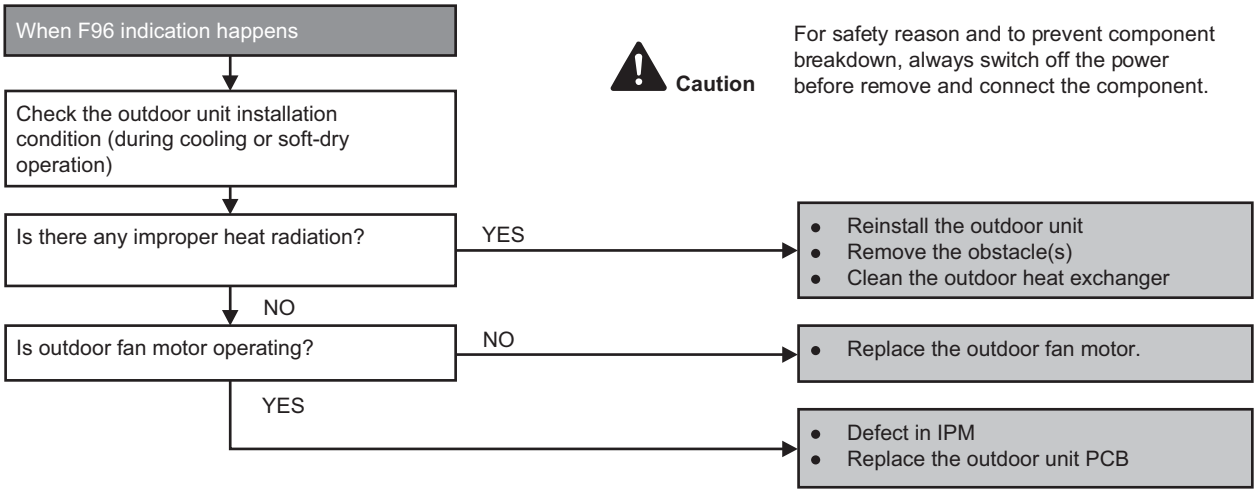

15.5.22 F97 (Compressor Overheating)

Malfunction Decision Conditions

- During operation of cooling and heating, when compressor tank temperature data (233.6°F) is detected by the compressor tank temperature sensor.

Malfunction Caused

- Faulty compressor tank temperature sensor
- 2/3 way valve closed
- Refrigerant shortage (refrigerant leakage)
- Faulty outdoor unit PCB
- Faulty compressor

Troubleshooting

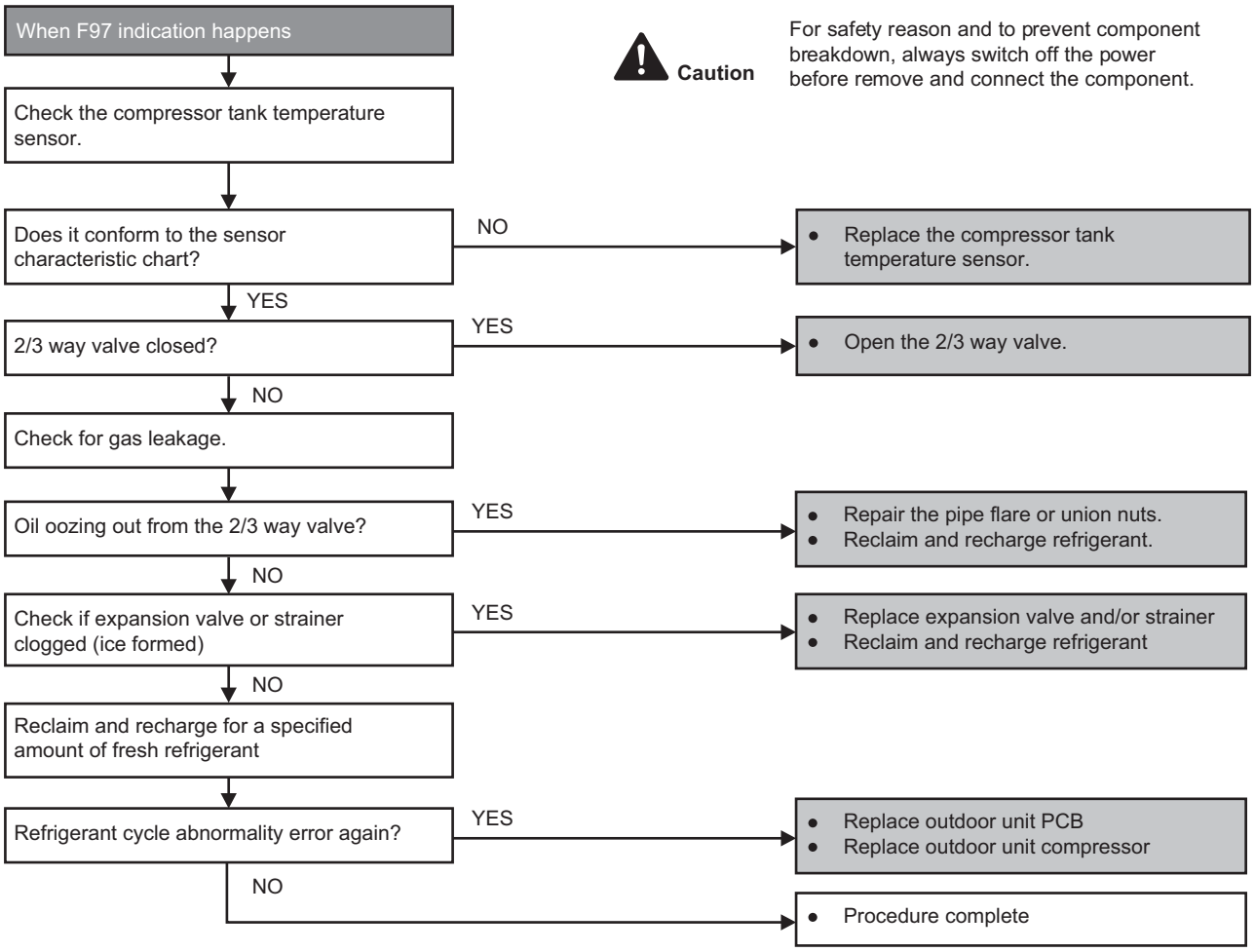

15.5.23 F98 (Input Over Current Detection)

Malfunction Decision Conditions

- During operation of cooling and heating, when an input over-current (X value in Total Running Current Control) is detected by checking the input current value being detected by current transformer (CT) with the compressor running.

Malfunction Caused

- Excessive refrigerant.
- Faulty outdoor unit PCB.

Troubleshooting

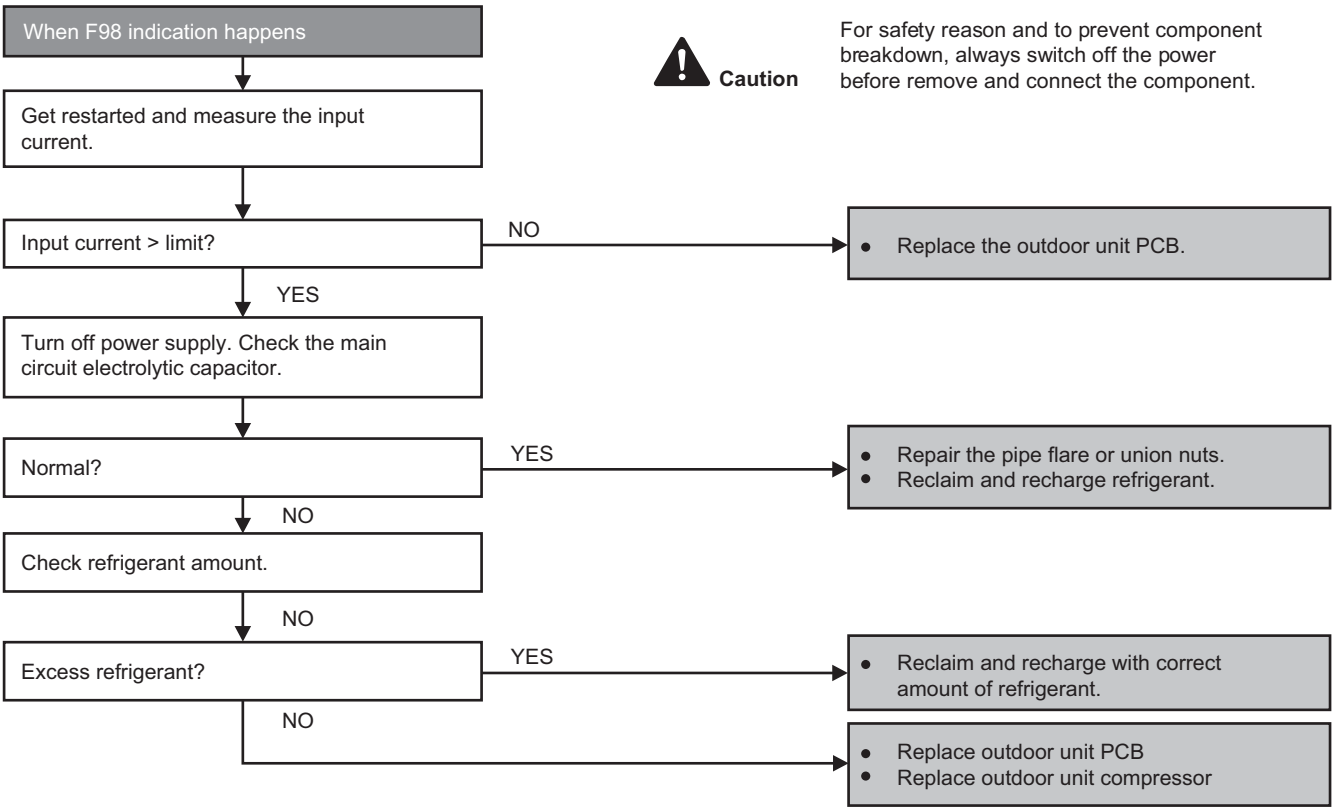

15.5.24 F99 (DC Peak Detection)

Malfunction Decision Conditions

During startup and operation of cooling and heating, when inverter DC peak data is received by the outdoor internal DC Peak sensing circuitry.

Malfunction Caused

- DC current peak due to compressor failure.
- DC current peak due to defective power transistor(s).
- DC current peak due to defective outdoor unit PCB.
- DC current peak due to short circuit.

Troubleshooting

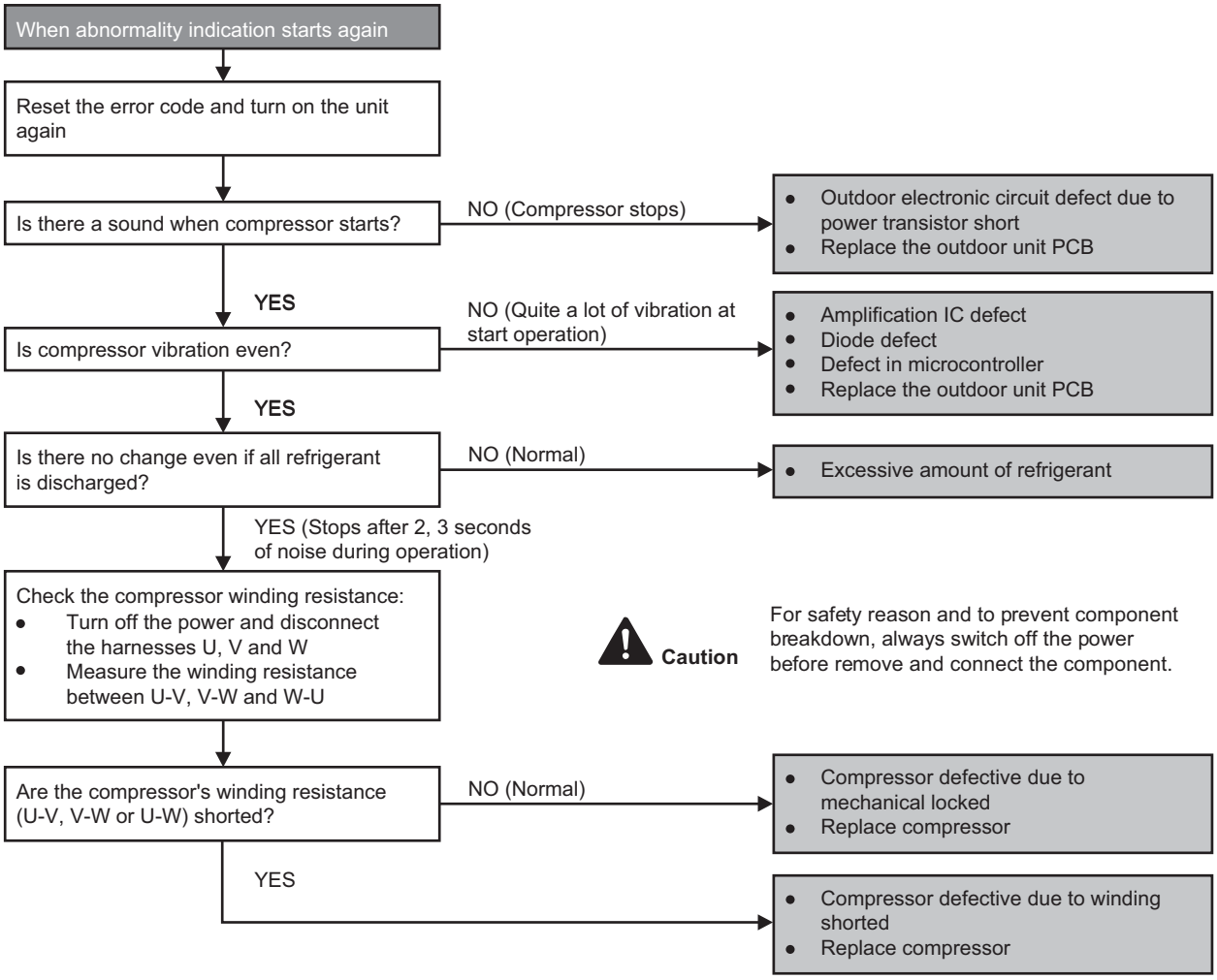

16. Disassembly and Assembly Instructions

WARNING

High Voltage are generated in the electrical parts area by the capacitor. Ensure that the capacitor has discharged sufficiently before proceeding with repair work. Failure to heed this caution may result in electric shocks.

16.1 Indoor Electronic Controller, Blower Fan, Fan Motor & Drain Motor Removal Procedure.

16.1.1 To Remove Cabinet Bottom Plate

1 Unscrew 14 screws on the cabinet bottom plate, 10 screws on the cabinet top plate and detach cabinet bottom plate and cabinet top plate from unit.

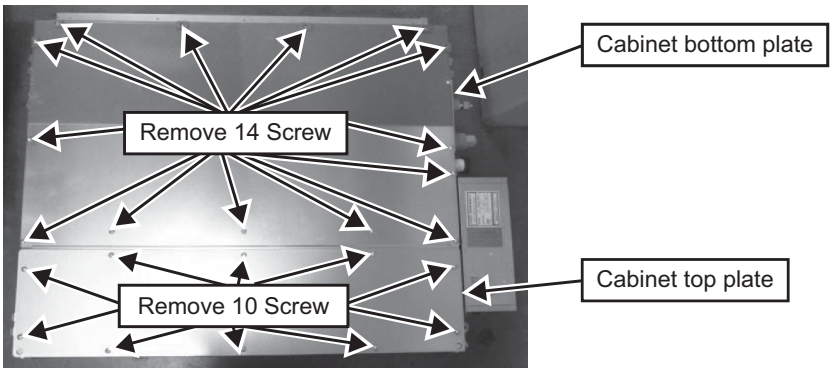

16.1.2 To Remove Electronic Controller

1 Unscrew the 2 screws on the Control Board and open the Control Board Cover.

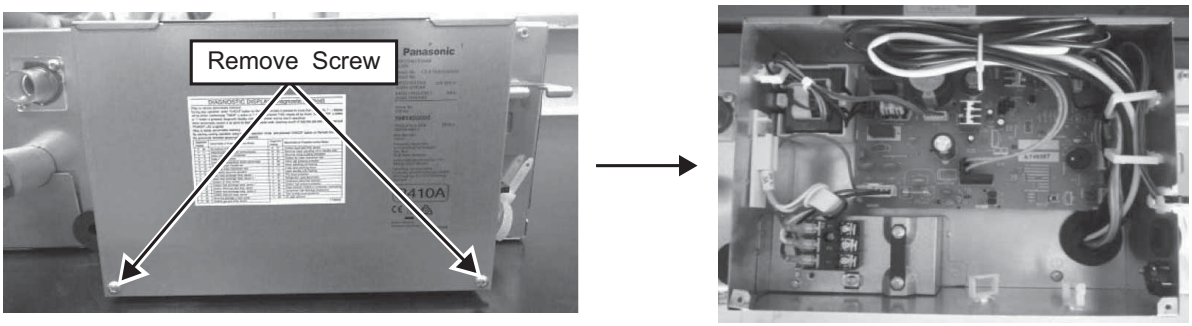

2 Detach all connectors as labeled from the electronic controller. Then pull out main controller gently.

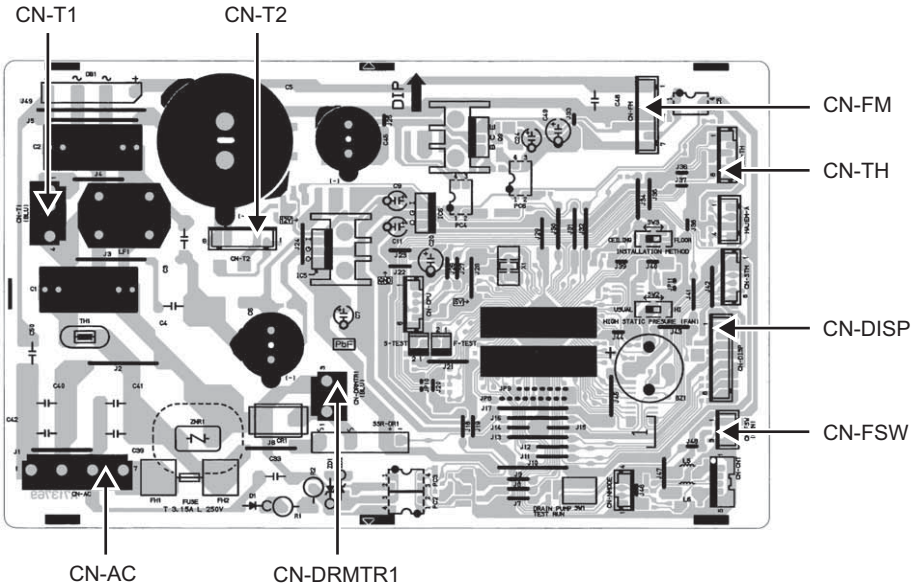

16.1.3 To Remove Fan Motor and Blower Fan

1 Detach the Upper and Inner Casing
2 Disengage the 4 catches (2 each on the left and right) on the Air Guide.

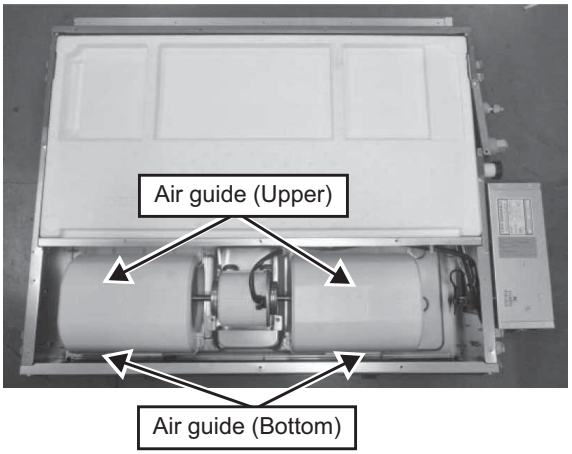

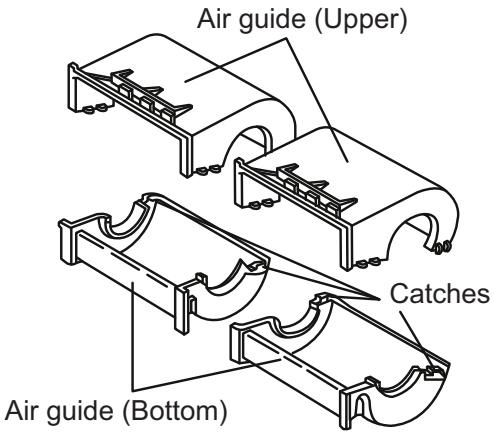

3 Unscrew the 2 screws on the Fan Motor Bracket and detach Fan Motor Bracket.
4 Remove the Fan Motor and Blower Fan from the unit.
5 Use a 3.0 mm hexagonal wrench to loosen the bolts connecting the Fan Motor and Fan. Detach the shaft connecting the Fan Motor and Blower Fan.

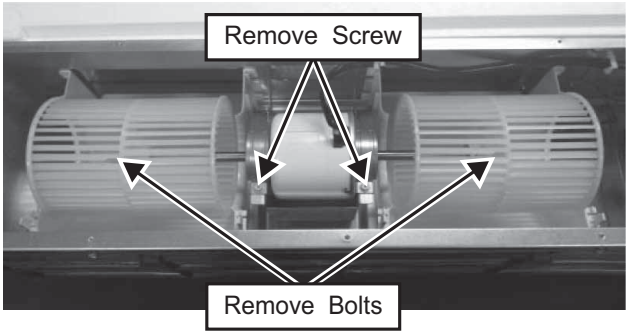

16.1.4 To Remove the Drain Motor

1 Unscrew the 1 screw on the Side Plate and remove Drain Pan from the unit.

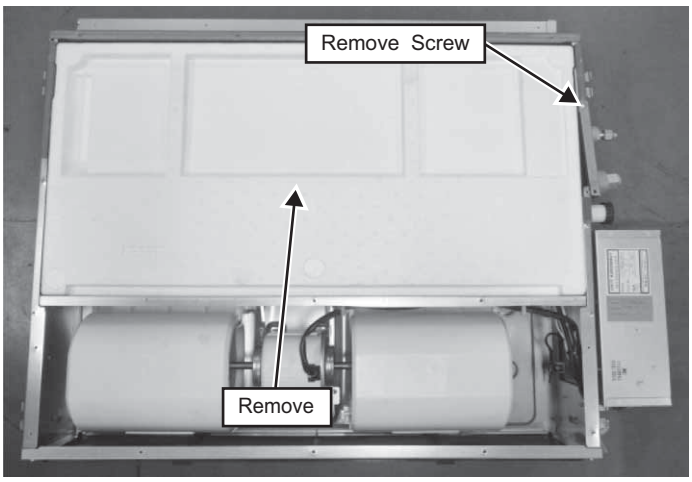

2 Unscrew 5 screws on the Evaporator and remove 2 sensor from holder and remove Evaporator from the unit.

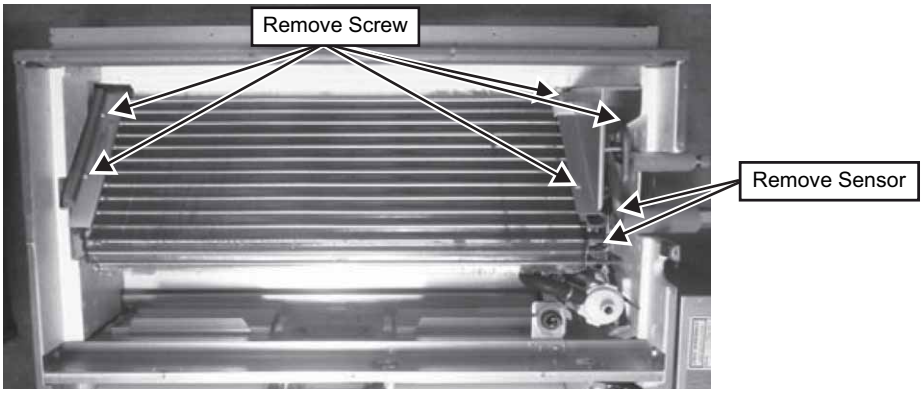

3 Unscrew 4 screws, 1 nut and 1 Spring Clip on the Drain Motor Bracket and remove Drain Motor from unit.

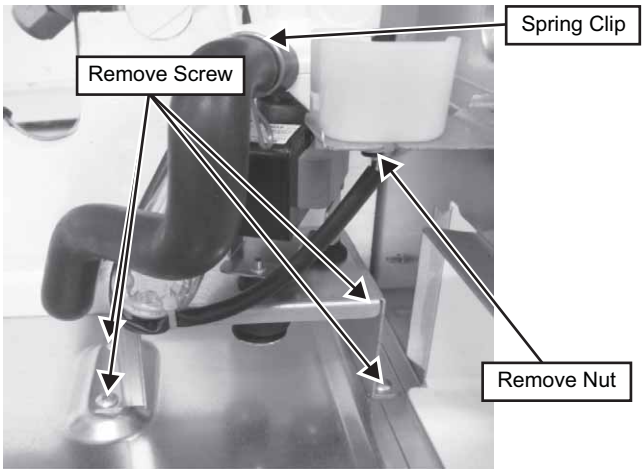

4 Unscrew 3 screws on the Drain Motor and detach the Drain Motor from Drain Motor Bracket.

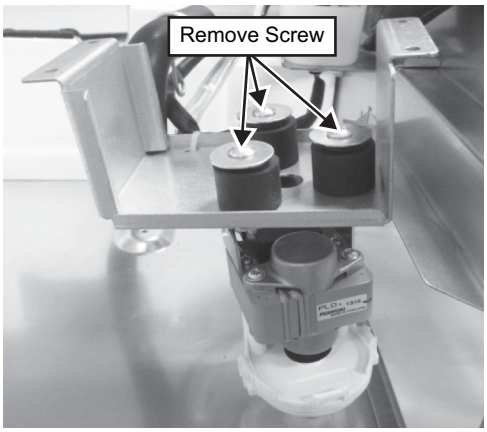

16.2 Outdoor Electronic Controller Removal Procedure

16.2.1 CU-E9SD3UA CU-E12SD3UA

⚠ Caution! When handling electronic controller, be careful of electrostatic discharge.

1 Remove the 3 screws of the Top Panel.

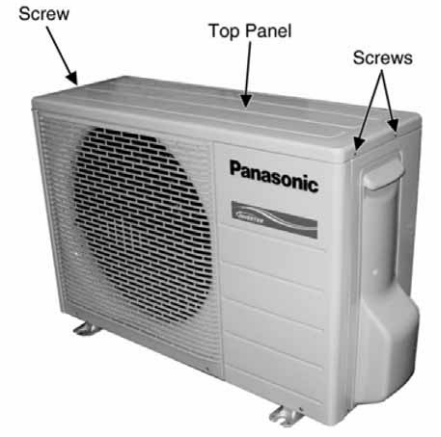

Fig. 1

2 Remove the 6 screws of the Front Panel.

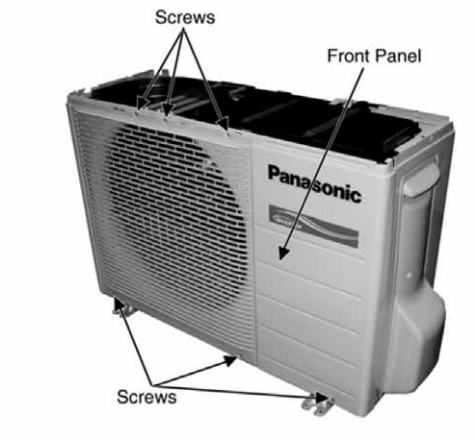

Fig. 2

3 Remove the screw of the Terminal Board Cover.

4 Remove the Top Cover of the Control Board by 4 hooks.

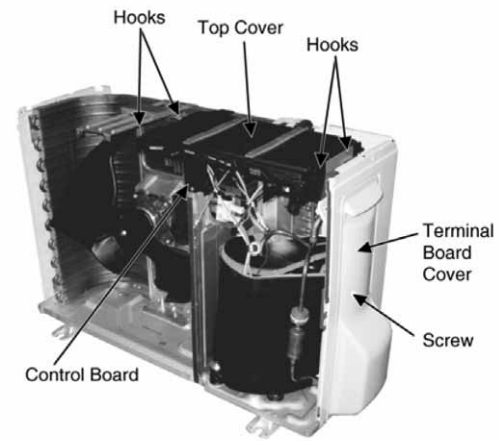

Fig. 3

5 Remove the Control Board as follows:

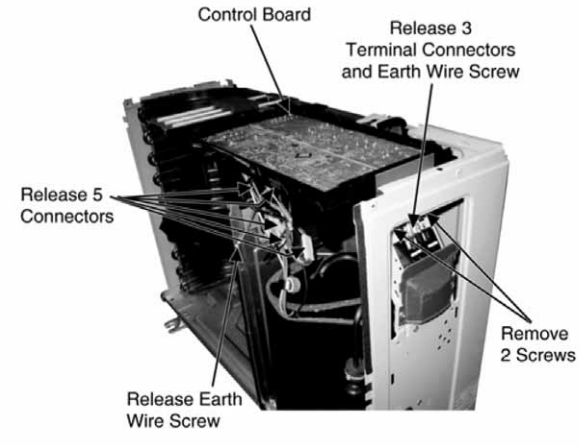

Fig. 4

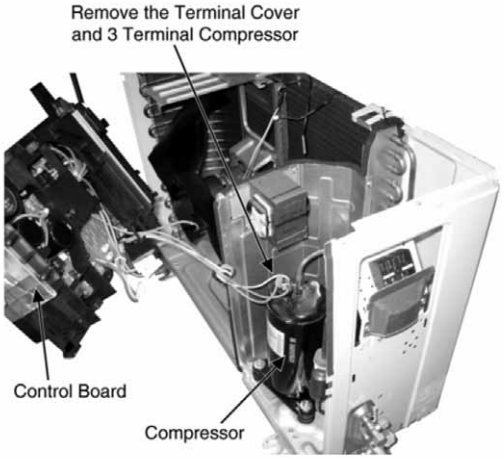

Fig. 5

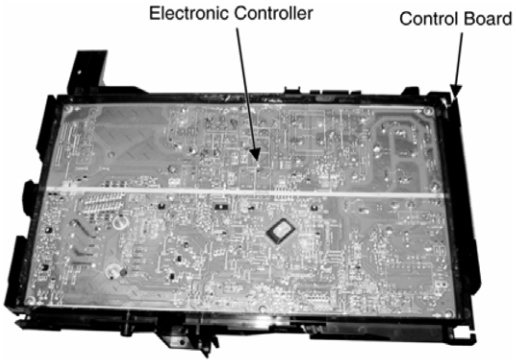

Fig. 6

16.2.2 CU-E18SD3UA

⚠ Caution! When handling electronic controller, be careful of electrostatic discharge.

1 Remove the 8 screws of the Top Panel.

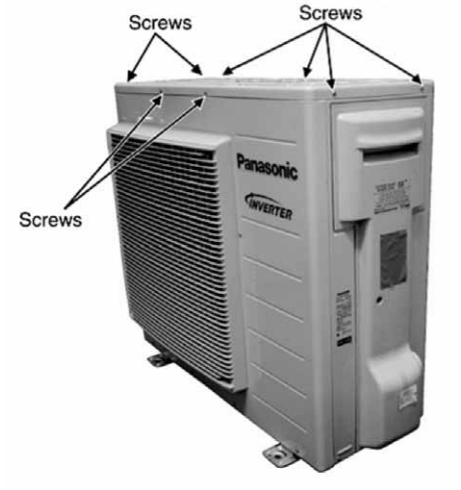

Fig. 1

2 Remove the 8 screws of the Front Panel.

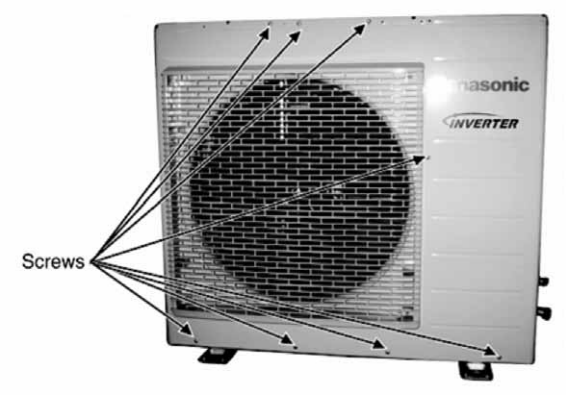

Fig. 2

3 Remove the Top Cover of the Electronic Controller.

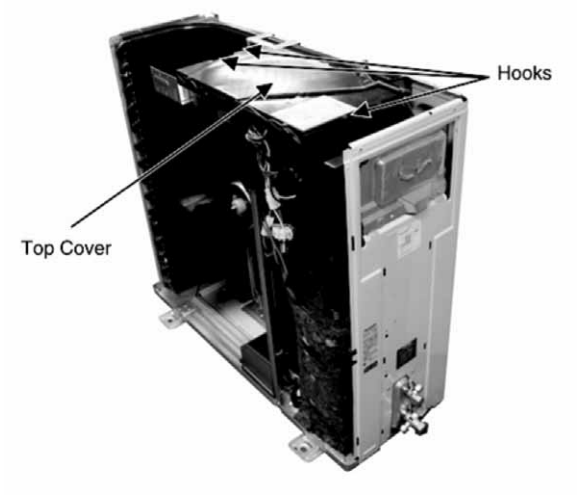

Fig. 3

4 Remove the Control Board.

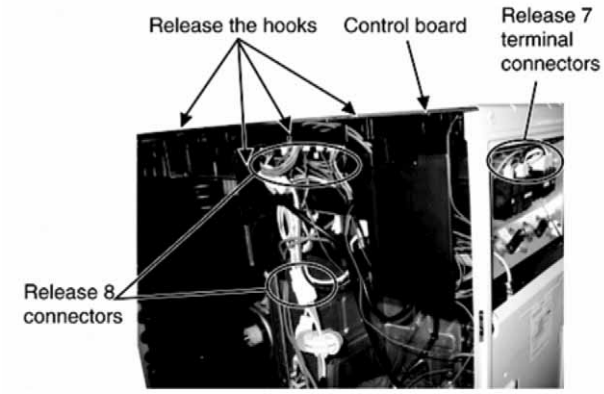

Fig. 4

5 Remove the 6 screws of the Electronic Controller.

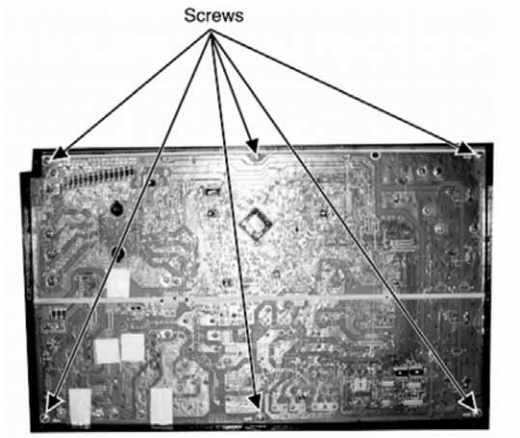

Fig. 5

⚠ Caution! When handling electronic controller, be careful of electrostatic discharge.

17. Technical Data

17.1 Technical data provided are based on the air conditioner running under free frequency.

17.1.1 Cool Mode Performance Data

Unit setting: Standard piping length, Hi Fan, Cool mode at 60.8°F
Voltage: 208V/230V

17.1.1.1 CS-E9SD3UAW/CU-E9SD3UA

Indoor (°C/°F)		Outdoor DB (°C/°F)											
DB	WB	-20 (-4)			-10 (14)			0 (32)			5 (41)		
		TC	SHC	IP	TC	SHC	IP	TC	SHC	IP	TC	SHC	IP
27 (80.6)	19 (66.2)	2966	2599	508	2966	2599	516	2952	2622	504	3013	2676	476
	22 (71.6)	3134	1847	540	3134	1847	549	3153	1874	517	3404	1991	386
23 (73.4)	16 (60.8)	2776	2748	485	2776	2748	493	2683	2656	527	3039	3009	424
	18 (64.4)	2920	1841	498	2920	1841	506	2827	1808	530	2987	1903	447
20 (68)	13 (55.4)	2637	2611	525	2637	2611	534	2543	2518	547	2423	2399	412
	16 (60.8)	2718	1830	535	2718	1830	544	2725	1816	525	2651	1851	430

Indoor (°C/°F)		Outdoor DB (°C/°F)											
DB	WB	16 (60.8)			25 (77)			35 (95)			46 (114.8)		
		TC	SHC	IP	TC	SHC	IP	TC	SHC	IP	TC	SHC	IP
27 (80.6)	19 (66.2)	3150	2621	432	3147	2731	730	3000	2760	850	2166	1993	829
	22 (71.6)	3400	1958	500	3312	1849	670	3194	1916	835	2364	1418	792
23 (73.4)	16 (60.8)	3020	2990	530	2881	2852	751	2765	2737	861	1962	1942	850
	18 (64.4)	3010	1889	481	2920	1802	671	2836	1978	850	2230	1555	842
20 (68)	13 (55.4)	2264	2241	274	2276	2253	564	2540	2515	864	1775	1757	768
	16 (60.8)	2569	1768	482	2610	1770	691	2582	1898	856	1985	1460	864

(Dry bulb value based on 46% humidity)

17.1.1.2 CS-E12SD3UAW/CU-E12SD3UA

Indoor (°C/°F)		Outdoor DB (°C/°F)											
DB	WB	-20 (-4)			-10 (14)			0 (32)			5 (41)		
		TC	SHC	IP	TC	SHC	IP	TC	SHC	IP	TC	SHC	IP
27 (80.6)	19 (66.2)	3780	3276	688	3789	3284	701	3776	3317	682	3856	3388	645
	22 (71.6)	3998	2331	734	4004	2334	746	4028	2368	699	4351	2517	520
23 (73.4)	16 (60.8)	3554	3518	659	3554	3518	669	3425	3391	721	3879	3840	575
	18 (64.4)	3728	2324	676	3728	2324	684	3610	2284	718	3815	2404	609
20 (68)	13 (55.4)	3372	3338	721	3372	3338	723	3254	3221	738	3075	3044	534
	16 (60.8)	3479	2317	722	3479	2317	735	3487	2299	719	3135	2166	480

Indoor (°C/°F)		Outdoor DB (°C/°F)											
DB	WB	16 (60.8)			25 (77)			35 (95)			46 (114.8)		
		TC	SHC	IP	TC	SHC	IP	TC	SHC	IP	TC	SHC	IP
27 (80.6)	19 (66.2)	4005	3296	573	3851	3305	945	3900	3549	1150	2954	2688	1234
	22 (71.6)	4180	2381	574	4289	2368	921	4152	2464	1130	2995	1777	1165
23 (73.4)	16 (60.8)	3590	3554	651	3435	3401	960	3594	3558	1165	2556	2530	1198
	18 (64.4)	3811	2366	628	3752	2291	921	3687	2543	1149	2706	1867	1198
20 (68)	13 (55.4)	2784	2756	305	2930	2901	756	3303	3269	1169	2396	2372	1254
	16 (60.8)	3142	2139	570	3235	2170	919	3356	2441	1158	2457	1787	1196

(Dry bulb value based on 46% humidity)

17.1.1.3 CS-E18SD3UAW/CU-E18SD3UA

Indoor (°C/°F)		Outdoor DB (°C/°F)											
DB	WB	-20 (-4)			-10 (14)			0 (32)			5 (41)		
		TC	SHC	IP	TC	SHC	IP	TC	SHC	IP	TC	SHC	IP
27 (80.6)	19 (66.2)	6210	5142	1137	6203	5137	1123	6196	5229	1090	6179	5113	1080
	22 (71.6)	7123	4203	993	7116	4199	981	6784	4107	1138	6347	3863	1135
23 (73.4)	16 (60.8)	5465	5410	1274	5459	5405	1259	5804	5746	1051	5553	5497	1163
	18 (64.4)	6109	3956	1168	6103	3952	1154	6800	4261	918	6356	3964	1214
20 (68)	13 (55.4)	4831	4783	1264	4806	4758	1249	4795	4747	836	4622	4576	996
	16 (60.8)	4818	3501	1457	4793	3484	1439	5043	3615	869	5450	3859	858

Indoor (°C/°F)		Outdoor DB (°C/°F)											
DB	WB	16 (60.8)			25 (77)			35 (95)			46 (114.8)		
		TC	SHC	IP	TC	SHC	IP	TC	SHC	IP	TC	SHC	IP
27 (80.6)	19 (66.2)	6155	5180	1065	5948	5086	1607	5700	5187	1820	3479	3166	1420
	22 (71.6)	6616	4106	1191	6478	4032	1630	6290	3240	1844	3837	1977	1439
23 (73.4)	16 (60.8)	5789	5732	1085	5437	5382	1565	5216	5164	1922	3186	3154	1500
	18 (64.4)	6240	3943	1088	5859	3753	1545	5742	3848	1957	3505	2349	1531
20 (68)	13 (55.4)	5009	4959	909	4909	4859	1500	4810	4762	1888	2929	2900	1485
	16 (60.8)	5699	3744	1465	5882	4015	1933	5373	2137	2057	3281	1305	1610

(Dry bulb value based on 46% humidity)

TC - Total Cooling Capacity (W)
SHC - Sensible Heat Capacity (W)
IP - Input Power (W)

17.1.2 Heat Mode Performance Data

Unit setting: Standard piping length, Hi Fan, Heat mode at 86°F
Voltage: 208V/230V

17.1.2.1 CS-E9SD3UAW/CU-E9SD3UA

Indoor (°C/°F)	Outdoor WB (°C/°F)											
DB	-20 (-4)		-8.3 (17.06)		1.7 (35.06)		8.3 (46.94)		12 (53.6)		23.9 (75.02)	
	TC	IP	TC	IP	TC	IP	TC	IP	TC	IP	TC	IP
24 (75.2)	2068	1301	2746	1320	3585	1459	4157	1512	4259	1525	4462	1424
20 (68)	2178	1295	2936	1315	3688	1431	4140	1500	4217	1491	4716	1393
16 (60.8)	1759	1261	3017	1301	3989	1443	4443	1539	4470	1466	4601	1369

17.1.2.2 CS-E12SD3UAW/CU-E12SD3UA

Indoor (°C/°F)	Outdoor WB (°C/°F)											
DB	-20 (-4)		-8.3 (17.06)		1.7 (35.06)		8.3 (46.94)		12 (53.6)		23.9 (75.02)	
	TC	IP	TC	IP	TC	IP	TC	IP	TC	IP	TC	IP
24 (75.2)	2383	1625	3164	1505	4131	1663	4789	1724	4597	1738	5141	1623
20 (68)	2510	1664	3383	1499	4249	1631	4770	1710	4859	1700	5434	1588
16 (60.8)	2026	1654	3476	1484	4596	1645	5119	1755	4740	1671	5301	1561

17.1.2.3 CS-E18SD3UAW/CU-E18SD3UA

Indoor (°C/°F)	Outdoor WB (°C/°F)											
DB	-20 (-4)		-8.3 (17.06)		1.7 (35.06)		8.3 (46.94)		12 (53.6)		23.9 (75.02)	
	TC	IP	TC	IP	TC	IP	TC	IP	TC	IP	TC	IP
24 (75.2)	3083	2178	4688	2303	5727	2264	6917	2304	7119	2291	7319	2160
20 (68)	3176	2110	4702	2213	5813	2132	7100	2180	7406	2199	7606	2072
16 (60.8)	2999	2019	4744	2115	5879	2057	7276	2061	7608	2082	7808	1962

TC - Total Heating Capacity (W)
IP - Input Power (W)

17.2 Technical data provided are based on the air conditioner running under rated frequency.

17.2.1 Cool Mode Performance Data

Unit setting: Standard piping length, Hi Fan, Cool mode at 60.8°F
Voltage: 208V/230V

17.2.1.1 CS-E9SD3UAW/CU-E9SD3UA

Indoor (°C/°F)		Outdoor DB (°C/°F)											
DB	WB	-20 (-4)			-10 (14)			0 (32)			5 (41)		
		TC	SHC	IP	TC	SHC	IP	TC	SHC	IP	TC	SHC	IP
27 (80.6)	19 (66.2)	2966	2655	508	2966	2655	516	2952	2679	504	3013	2734	476
	22 (71.6)	3134	1887	540	3134	1887	549	3153	1915	517	3404	2034	386
23 (73.4)	16 (60.8)	2776	2748	485	2776	2748	493	2683	2656	527	3039	3008	424
	18 (64.4)	2920	1880	498	2920	1880	506	2827	1848	530	2987	1945	447
20 (68)	13 (55.4)	2637	2611	525	2637	2611	534	2543	2518	547	2331	2308	375
	16 (60.8)	2718	1870	535	2718	1870	544	2725	1856	525	2454	1751	355

Indoor (°C/°F)		Outdoor DB (°C/°F)											
DB	WB	16 (60.8)			25 (77)			35 (95)			46 (114.8)		
		TC	SHC	IP	TC	SHC	IP	TC	SHC	IP	TC	SHC	IP
27 (80.6)	19 (66.2)	3135	2665	422	2770	2455	617	2640	2482	690	2166	1920	829
	22 (71.6)	3238	1905	420	3023	1724	590	2811	1723	678	2364	1349	792
23 (73.4)	16 (60.8)	2781	2753	473	2509	2484	633	2433	2409	699	1962	1943	850
	18 (64.4)	2941	1886	456	2757	1738	616	2495	1778	690	2156	1360	827
20 (68)	13 (55.4)	2061	2040	209	2042	2022	478	2236	2213	702	1516	1501	642
	16 (60.8)	2363	1662	402	2455	1701	630	2272	1707	695	1920	1330	847

(Dry bulb value based on 46% humidity)

17.2.1.2 CS-E12SD3UAW/CU-E12SD3UA

Indoor (°C/°F)		Outdoor DB (°C/°F)											
DB	WB	-20 (-4)			-10 (14)			0 (32)			5 (41)		
		TC	SHC	IP	TC	SHC	IP	TC	SHC	IP	TC	SHC	IP
27 (80.6)	19 (66.2)	3775	3343	678	3775	3343	689	3757	3373	671	3835	3443	635
	22 (71.6)	3989	2377	720	3989	2377	732	4013	2411	689	4333	2561	515
23 (73.4)	16 (60.8)	3533	3497	647	3533	3497	657	3414	3380	703	3867	3829	565
	18 (64.4)	3716	2368	664	3716	2368	674	3599	2327	706	3802	2449	596
20 (68)	13 (55.4)	3357	3323	700	3357	3323	712	3237	3205	729	2967	2937	500
	16 (60.8)	3459	2354	714	3459	2354	725	3468	2337	700	3123	2204	474

Indoor (°C/°F)		Outdoor DB (°C/°F)											
DB	WB	16 (60.8)			25 (77)			35 (95)			46 (114.8)		
		TC	SHC	IP	TC	SHC	IP	TC	SHC	IP	TC	SHC	IP
27 (80.6)	19 (66.2)	3990	3356	563	3525	3091	823	3360	3125	920	2757	2564	1105
	22 (71.6)	4121	2399	560	3847	2171	786	3577	2170	904	2935	1780	1086
23 (73.4)	16 (60.8)	3539	3503	631	3193	3161	844	3096	3065	932	2541	2515	1120
	18 (64.4)	3743	2375	608	3508	2189	821	3176	2239	919	2606	1837	1104
20 (68)	13 (55.4)	2623	2596	279	2599	2573	638	2845	2817	935	2335	2311	1123
	16 (60.8)	3007	2092	536	3125	2142	841	2892	2149	926	2373	1764	1113

(Dry bulb value based on 46% humidity)

17.2.1.3 CS-E18SD3UAW/CU-E18SD3UA

Indoor (°C/°F)		Outdoor DB (°C/°F)											
DB	WB	-20 (-4)			-10 (14)			0 (32)			5 (41)		
		TC	SHC	IP	TC	SHC	IP	TC	SHC	IP	TC	SHC	IP
27 (80.6)	19 (66.2)	6210	5255	1137	6203	5250	1123	6196	5344	1090	6179	5226	1080
	22 (71.6)	7123	4295	993	7116	4291	981	6784	4198	1138	6327	3936	1135
23 (73.4)	16 (60.8)	5465	5410	1254	5459	5405	1239	5804	5746	1031	5533	5478	1143
	18 (64.4)	6109	4043	1148	6103	4039	1134	6800	4355	898	6336	3811	1194
20 (68)	13 (55.4)	4811	4763	1244	4806	4758	1229	4775	4727	816	4602	4556	976
	16 (60.8)	4798	3564	1437	4793	3560	1419	5023	3680	849	5430	3929	838

Indoor (°C/°F)		Outdoor DB (°C/°F)											
DB	WB	16 (60.8)			25 (77)			35 (95)			46 (114.8)		
		TC	SHC	IP	TC	SHC	IP	TC	SHC	IP	TC	SHC	IP
27 (80.6)	19 (66.2)	6155	5294	1065	5386	4707	1452	5040	4687	1580	3459	3217	1420
	22 (71.6)	6367	4211	1069	5856	3725	1468	5562	2928	1601	3817	2010	1439
23 (73.4)	16 (60.8)	5707	5650	1065	4983	4933	1424	4612	4566	1668	3166	3134	1500
	18 (64.4)	6229	4023	1068	5477	3585	1440	5077	3477	1699	3485	2387	1527
20 (68)	13 (55.4)	4989	4939	892	4667	4620	1423	4253	4210	1639	2919	2890	1474
	16 (60.8)	5679	4475	1445	5593	3901	1827	4751	1931	1785	3261	1326	1605

(Dry bulb value based on 46% humidity)

TC - Total Cooling Capacity (W)
SHC - Sensible Heat Capacity (W)
IP - Input Power (W)

17.2.2 Heat Mode Performance Data

Unit setting: Standard piping length, Hi Fan, Heat mode at 86°F
Voltage: 208V/230V

17.2.2.1 CS-E9SD3UAW/CU-E9SD3UA

Indoor (°C/°F)	Outdoor WB (°C/°F)											
DB	-20 (-4)		-8.3 (17.06)		1.7 (35.06)		8.3 (46.94)		12 (53.6)		23.9 (75.02)	
	TC	IP	TC	IP	TC	IP	TC	IP	TC	IP	TC	IP
24 (75.2)	1275	747	2546	1039	3221	1128	3524	1129	3617	1149	3937	1114
20 (68)	1344	736	2722	1035	3313	1106	3510	1120	3581	1124	4161	1089
16 (60.8)	1085	718	2797	1024	3583	1116	3767	1149	3796	1104	4059	1071

17.2.2.2 CS-E12SD3UAW/CU-E12SD3UA

Indoor (°C/°F)	Outdoor WB (°C/°F)											
DB	-20 (-4)		-8.3 (17.06)		1.7 (35.06)		8.3 (46.94)		12 (53.6)		23.9 (75.02)	
	TC	IP	TC	IP	TC	IP	TC	IP	TC	IP	TC	IP
24 (75.2)	1472	833	2938	1159	3716	1259	4066	1260	3909	1282	4542	1243
20 (68)	1550	822	3141	1155	3823	1235	4050	1250	4132	1254	4801	1216
16 (60.8)	1251	802	3227	1143	4135	1245	4347	1283	4031	1233	4684	1195

17.2.2.3 CS-E18SD3UAW/CU-E18SD3UA

Indoor (°C/°F)	Outdoor WB (°C/°F)											
DB	-20 (-4)		-8.3 (17.06)		1.7 (35.06)		8.3 (46.94)		12 (53.6)		23.9 (75.02)	
	TC	IP	TC	IP	TC	IP	TC	IP	TC	IP	TC	IP
24 (75.2)	1893	1269	3545	1689	4526	1703	5933	1934	6194	1924	6675	1847
20 (68)	1949	1222	3556	1625	4592	1632	6090	1830	6441	1846	6941	1773
16 (60.8)	1820	1168	3586	1553	4641	1563	6241	1730	6614	1748	7127	1679

TC - Total Heating Capacity (W)
IP - Input Power (W)

17.3 Fan Performance

17.3.1 CS-E9SD3UAW CU-E9SD3UA

Test Report

RPM	Static Pressure (Pa) (Inch H2O)	Airflow (m^3/min) (ft^3/min)
1500	-0.1 (-0.0004)	18.3 (646)
	7.7 (0.0309)	17.7 (625)
	28.4 (0.1141)	16.1 (569)
	44.9 (0.1804)	14.6 (516)
	59.0 (0.2371)	13.2 (466)
	70.3 (0.2825)	12.0 (424)
1300	-0.1 (-0.0004)	15.6 (551)
	13.7 (0.0550)	14.6 (516)
	28.9 (0.1161)	13.1 (463)
	41.6 (0.1672)	11.6 (410)
	55.0 (0.2210)	10.2 (360)
1120	0.0 (0.0)	13.2 (466)
	9.1 (0.0366)	12.0 (424)
	23.3 (0.0936)	10.4 (367)
	36.8 (0.1479)	8.6 (304)

RPM	Static Pressure (Pa) (Inch H2O)	Airflow (m^3/min) (ft^3/min)
1090	0.0 (0.0)	13.0 (459)
	9.1 (0.0366)	11.9 (420)
	19.1 (0.0768)	10.7 (378)
	26.3 (0.1057)	9.7 (342)
940	0.0 (0.0)	10.0 (353)
	8.8 (0.0354)	9.0 (318)
	19.3 (0.0776)	7.4 (261)
	26.1 (0.1049)	6.1 (215)
880	0.0 (0.0)	9.3 (328)
	9.1 (0.0366)	8.3 (293)
	19.1 (0.0768)	6.6 (233)
	26.3 (0.1057)	5.1 (180)

Fan Performance Curve

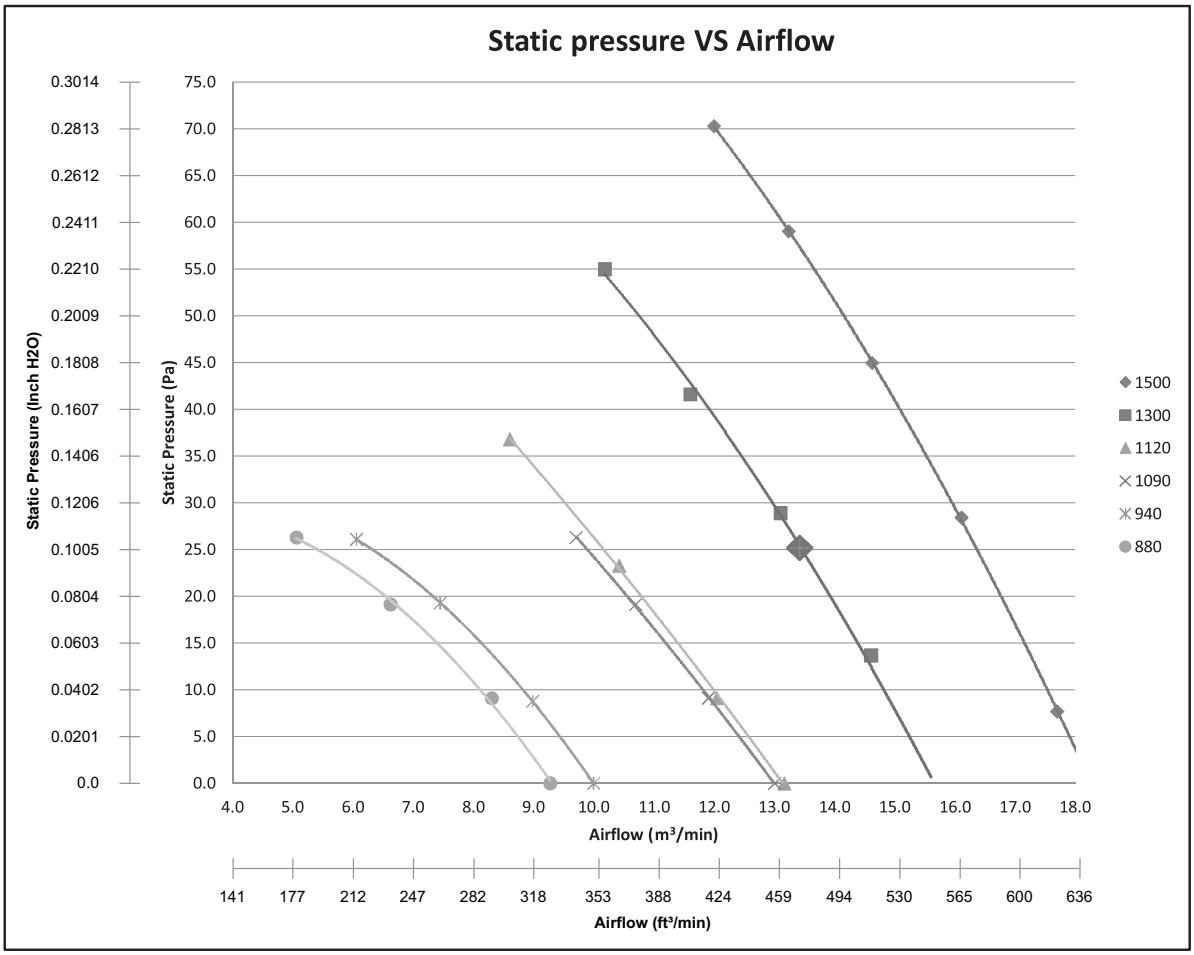

Cool	RPM	Static Pressure (Pa) (Inch H2O)	Airflow (m^3/min) (ft^3/min)
Hi Fan (Standard)	1300	25 (0.1005)	13.5 (477)
SHi Fan (Hi Static P selected)	1500	56 (0.2250)	13.5 (477)
Me Fan (Standard)	1120	20 (0.0804)	10.8 (381)
Lo Fan (Standard)	940	15 (0.0603)	8.1 (286)

Heat	RPM	Static Pressure (Pa) (Inch H2O)	Airflow (m^3/min) (ft^3/min)
Hi Fan (Standard)	1300	25 (0.1005)	13.5 (477)
SHi Fan (Hi Static P selected)	1500	56 (0.2250)	13.5 (477)
Me Fan (Standard)	1090	19 (0.0763)	10.6 (374)
Lo Fan (Standard)	880	13 (0.0522)	7.6 (268)

17.3.2 CS-E12SD3UAW CU-E12SD3UA

Test Report

RPM	Static Pressure (Pa) (Inch H2O)	Airflow (m^3/min) (ft^3/min)
1550	-0.1 (-0.0004)	18.2 (643)
	7.7 (0.0309)	17.7 (625)
	28.4 (0.1141)	16.1 (569)
	44.9 (0.1804)	14.7 (519)
	59.0 (0.2371)	13.4 (473)
	70.3 (0.2825)	12.2 (431)
1300	-0.1 (-0.0004)	15.6 (551)
	13.7 (0.0550)	14.6 (516)
	28.9 (0.1161)	13.1 (463)
	41.6 (0.1672)	11.6 (410)
	55.0 (0.2210)	10.2 (360)
1120	0.0 (0.0)	13.2 (466)
	9.1 (0.0366)	12.0 (424)
	23.3 (0.0936)	10.4 (367)
	36.8 (0.1479)	8.6 (304)

RPM	Static Pressure (Pa) (Inch H2O)	Airflow (m^3/min) (ft^3/min)
1090	0.0 (0.0)	13.0 (459)
	9.1 (0.0366)	11.9 (420)
	19.1 (0.0768)	10.7 (378)
	26.3 (0.1057)	9.7 (342)
940	0.0 (0.0)	10.0 (353)
	8.8 (0.0354)	9.0 (318)
	19.3 (0.0776)	7.4 (261)
	26.1 (0.1049)	6.1 (215)
880	0.0 (0.0)	9.3 (328)
	9.1 (0.0366)	8.3 (293)
	19.1 (0.0768)	6.6 (233)
	26.3 (0.1057)	5.1 (180)

Fan Performance Curve

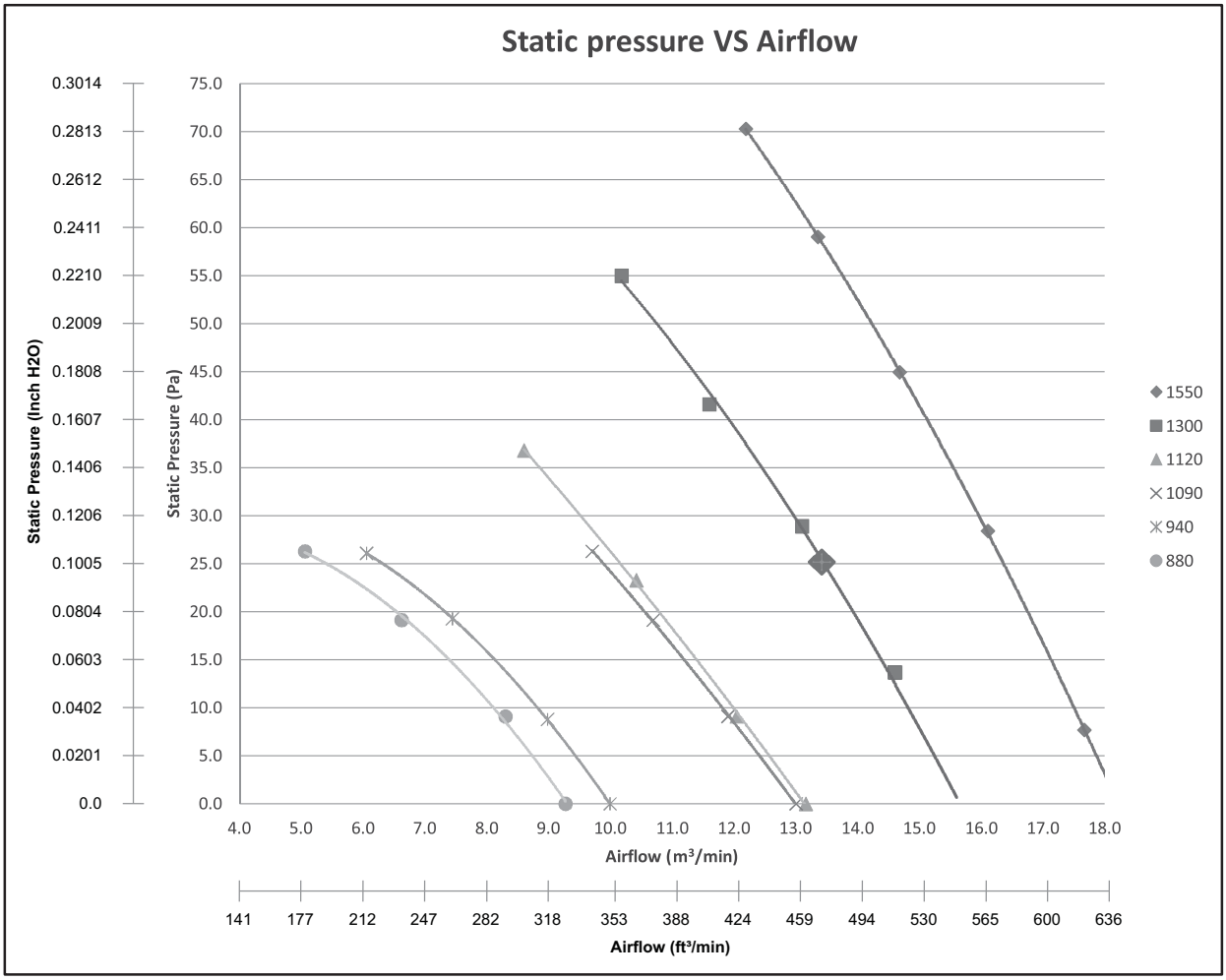

Cool	RPM	Static Pressure (Pa) (Inch H2O)	Airflow (m^3/min) (ft^3/min)
Hi Fan (Standard)	1300	25 (0.1005)	13.5 (477)
SHi Fan (Hi Static P selected)	1550	56 (0.2250)	13.5 (477)
Me Fan (Standard)	1120	20 (0.0804)	10.8 (381)
Lo Fan (Standard)	940	15 (0.0603)	8.1 (286)

Heat	RPM	Static Pressure (Pa) (Inch H2O)	Airflow (m^3/min) (ft^3/min)
Hi Fan (Standard)	1300	25 (0.1005)	13.5 (477)
SHi Fan (Hi Static P selected)	1550	56 (0.2250)	13.5 (477)
Me Fan (Standard)	1090	19 (0.0763)	10.6 (374)
Lo Fan (Standard)	880	13 (0.0522)	7.6 (268)

17.3.3 CS-E18SD3UAW CU-E18SD3UA

Test Report

RPM	Static Pressure (Pa) (Inch H2O)	Airflow (m^3/min) (ft^3/min)
1650	-0.1 (-0.0004)	19.7 (696)
	70.7 (0.2841)	14.1 (498)
	86.6 (0.3480)	12.6 (445)
	98.5 (0.3958)	11.1 (392)
	108.2 (0.4348)	9.8 (346)
	114.9 (0.4617)	8.8 (311)
1480	-0.1 (-0.0004)	17.2 (607)
	25.0 (0.1005)	15.3 (540)
	44.6 (0.1792)	13.6 (480)
	60.4 (0.2427)	11.9 (420)
	74.5 (0.2994)	10.5 (371)
1240	-0.1 (-0.0004)	14.6 (516)
	9.1 (0.0366)	13.7 (484)
	23.5 (0.0944)	12.4 (438)
	44.5 (0.1788)	9.9 (350)

RPM	Static Pressure (Pa) (Inch H2O)	Airflow (m^3/min) (ft^3/min)
1230	-0.1 (-0.0004)	14.5 (512)
	11.4 (0.0458)	13.4 (473)
	30.3 (0.1218)	11.6 (410)
	43.8 (0.1760)	9.8 (346)
1000	-0.1 (-0.0004)	11.8 (417)
	2.7 (0.0108)	11.3 (399)
	18.0 (0.0723)	9.6 (339)
	29.0 (0.1165)	7.9 (279)
980	-0.1 (-0.0004)	11.6 (410)
	2.7 (0.0108)	11.2 (395)
	17.6 (0.0707)	9.4 (332)
	29.0 (0.1165)	7.7 (272)

Fan Performance Curve

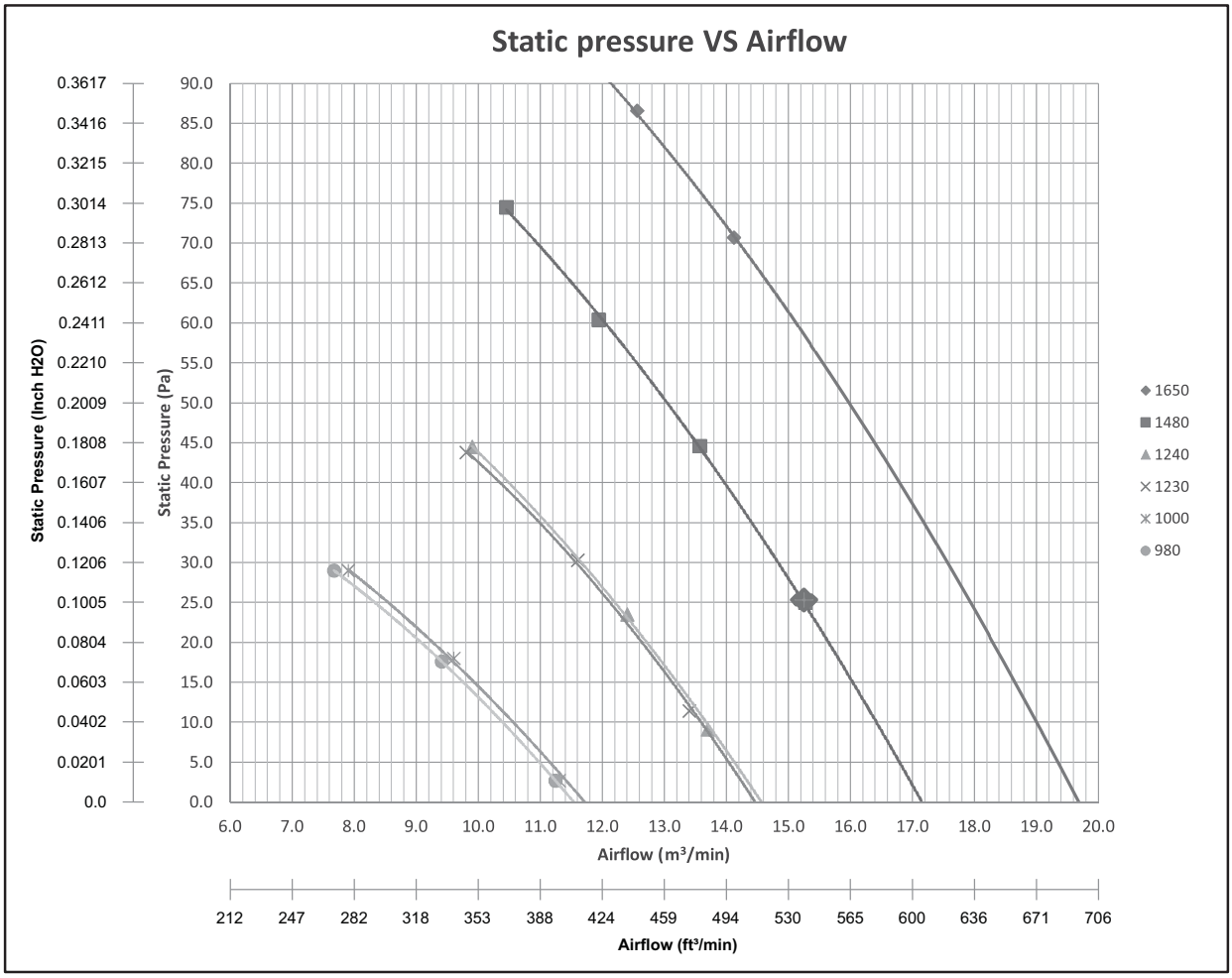

Cool	RPM	Static Pressure (Pa) (Inch H2O)	Airflow (m^3/min) (ft^3/min)
Hi Fan (Standard)	1480	25 (0.1005)	15.3 (540)
SHi Fan (Hi Static P selected)	1650	57 (0.2291)	15.3 (540)
Me Fan (Standard)	1230	21 (0.0844)	12.56 (443)
Lo Fan (Standard)	980	17 (0.0683)	9.42 (333)

Heat	RPM	Static Pressure (Pa) (Inch H2O)	Airflow (m^3/min) (ft^3/min)
Hi Fan (Standard)	1480	25 (0.1005)	15.3 (540)
SHi Fan (Hi Static P selected)	1650	57 (0.2291)	15.3 (540)
Me Fan (Standard)	1240	22 (0.0844)	12.56 (443)
Lo Fan (Standard)	1000	18 (0.0723)	9.42 (333)

18. Service Data

Service data provided are based on the air conditioner running under rated frequency during forced cooling / forced heating mode.

18.1 Cool Mode Outdoor Air Temperature Characteristic

18.1.1 CS-E9SD3UAW CU-E9SD3UA

Condition

- Indoor room temperature: 80.1°F Dry Bulb/66.9°F Wet Bulb
- Unit setting: Standard piping length, forced cooling at 60.8°F, Hi fan
- Compressor frequency: Rated for cooling operation
- Voltage: 208V/230V

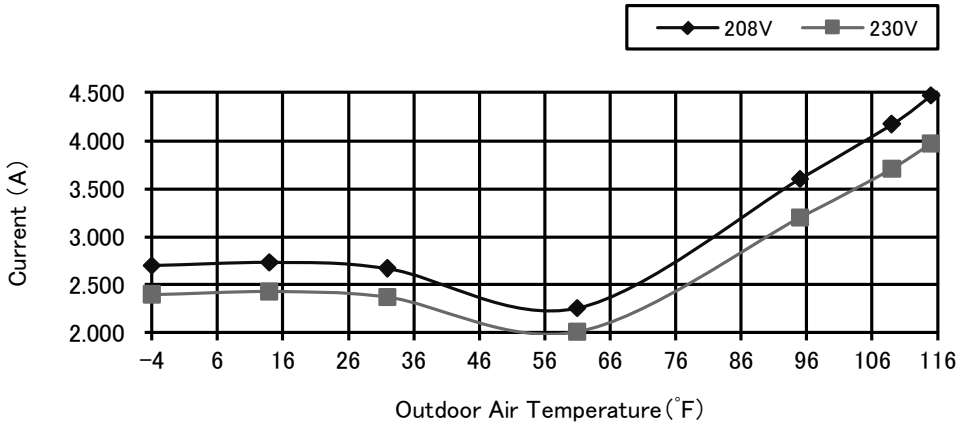

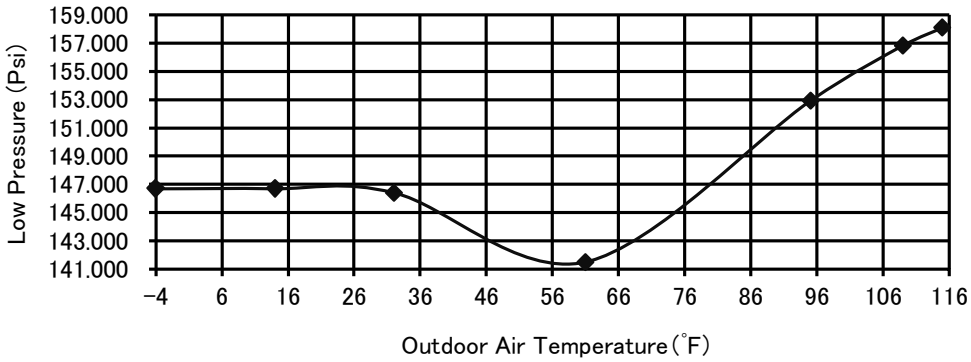

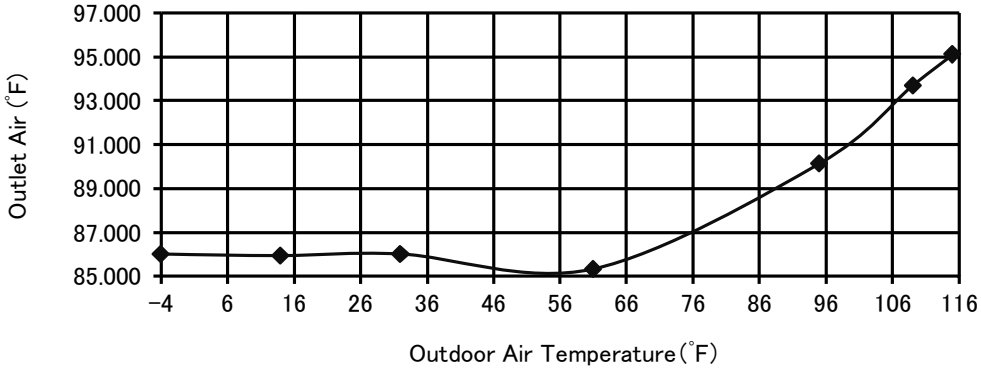

18.1.2 CS-E12SD3UAW CU-E12SD3UA

Condition

- Indoor room temperature: 80.1°F Dry Bulb/66.9°F Wet Bulb
- Unit setting: Standard piping length, forced cooling at 60.8°F, Hi fan
- Compressor frequency: Rated for cooling operation
- Voltage: 208V/230V

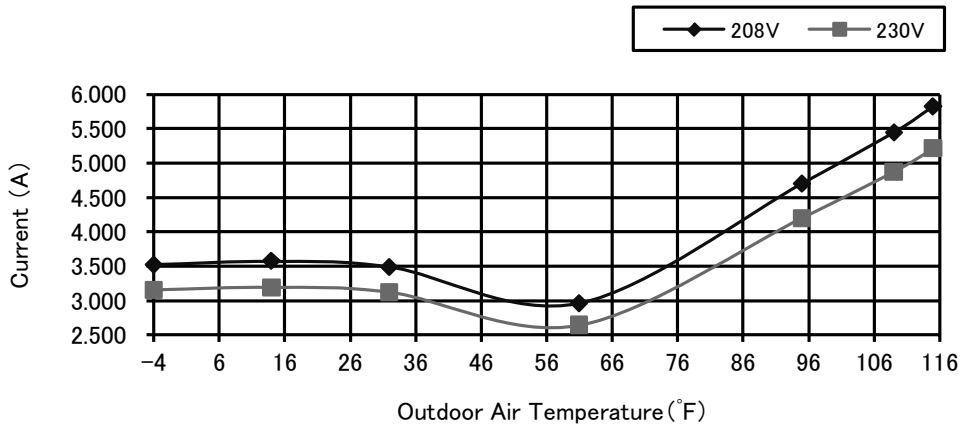

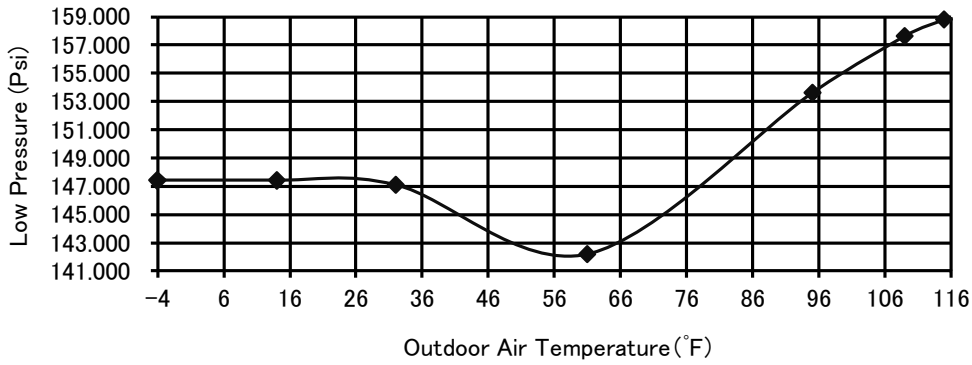

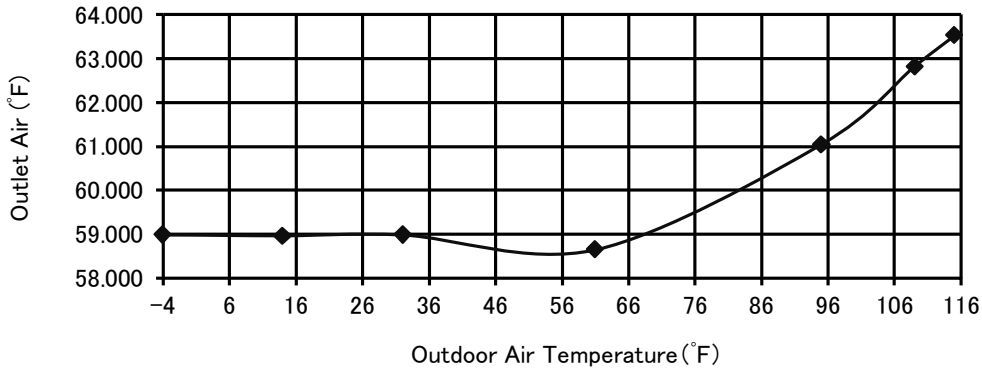

18.1.3 CS-E18SD3UAW CU-E18SD3UA

Condition

- Indoor room temperature: 80.1°F Dry Bulb/66.9°F Wet Bulb
- Unit setting: Standard piping length, forced cooling at 60.8°F, Hi fan
- Compressor frequency: Rated for cooling operation
- Voltage: 208V/230V

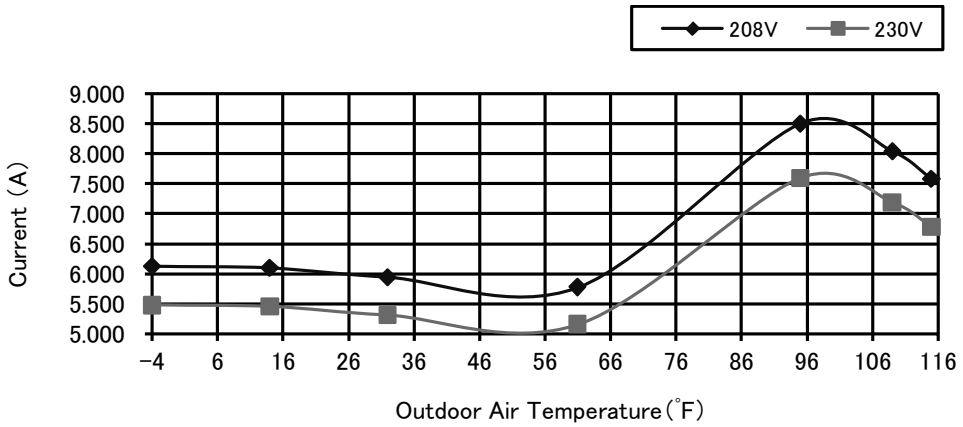

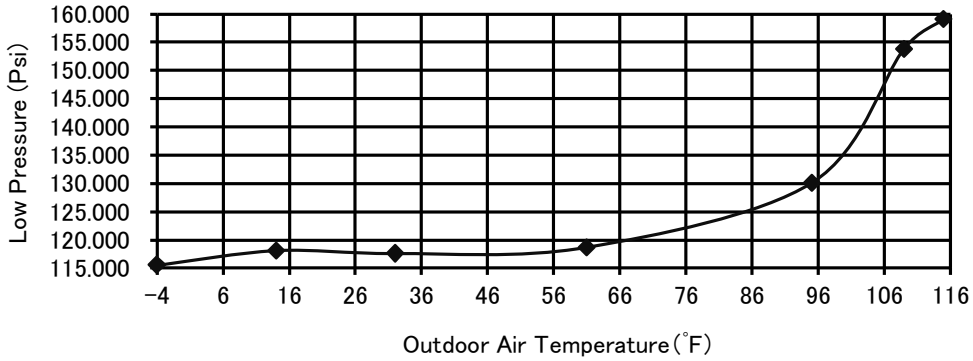

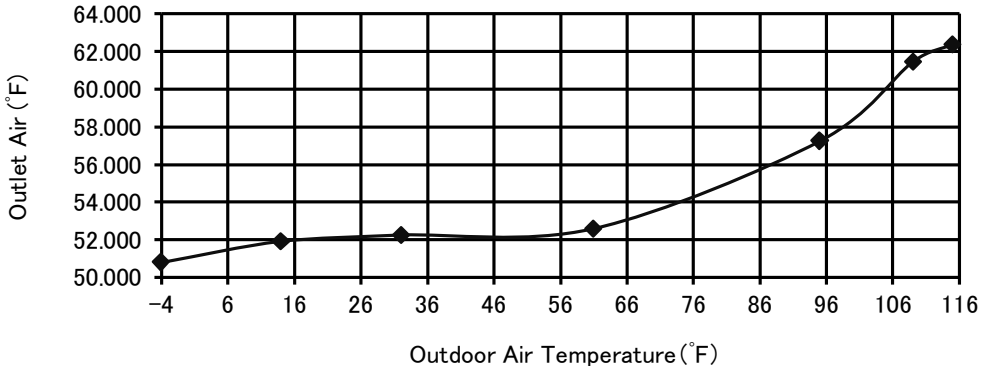

18.2 Heat Mode Outdoor Air Temperature Characteristic

18.2.1 CS-E9SD3UAW CU-E9SD3UA

Condition

- Indoor room temperature: 68°F Dry Bulb/ -°F Wet Bulb
- Unit setting: Standard piping length, forced heating at 86°F, Hi fan
- Compressor frequency: Rated for Heating operation
- Voltage: 208V/230V

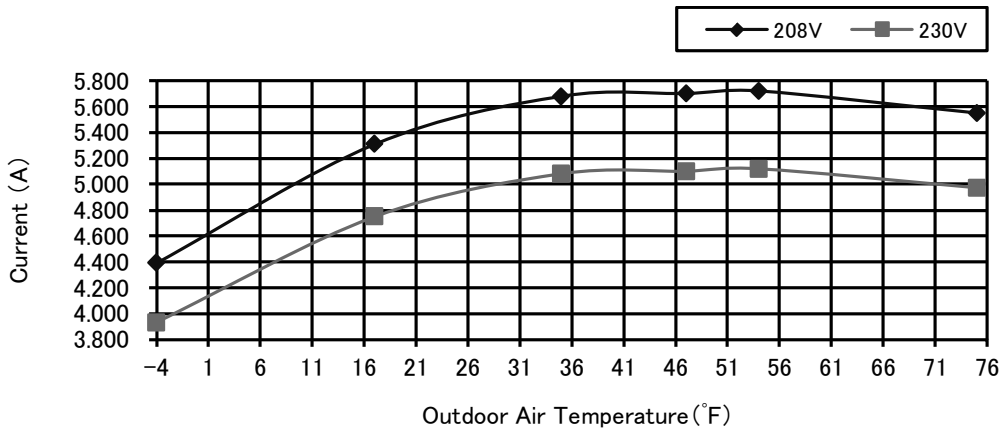

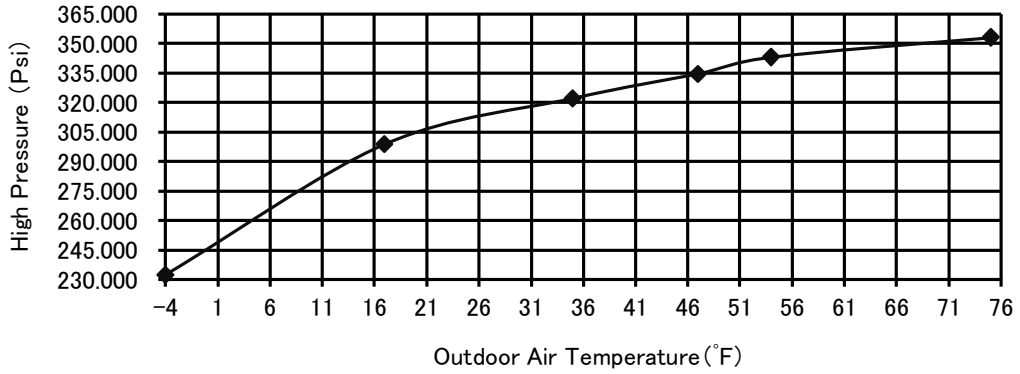

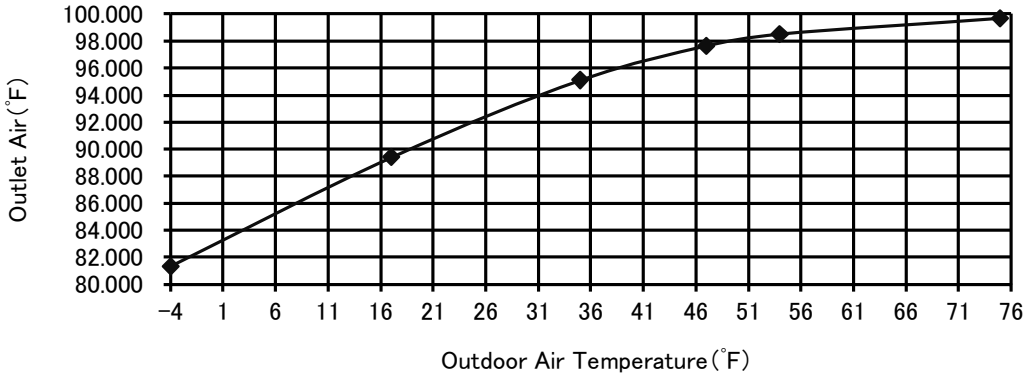

18.2.2 CS-E12SD3UAW CU-E12SD3UA

Condition

- Indoor room temperature: 68°F Dry Bulb/ -°F Wet Bulb
- Unit setting: Standard piping length, forced heating at 86°F, Hi fan
- Compressor frequency: Rated for Heating operation
- Voltage: 208V/230V

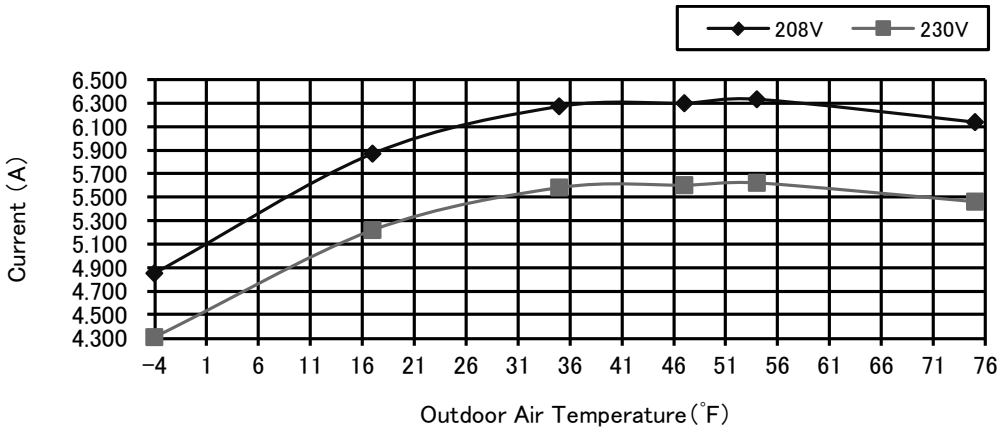

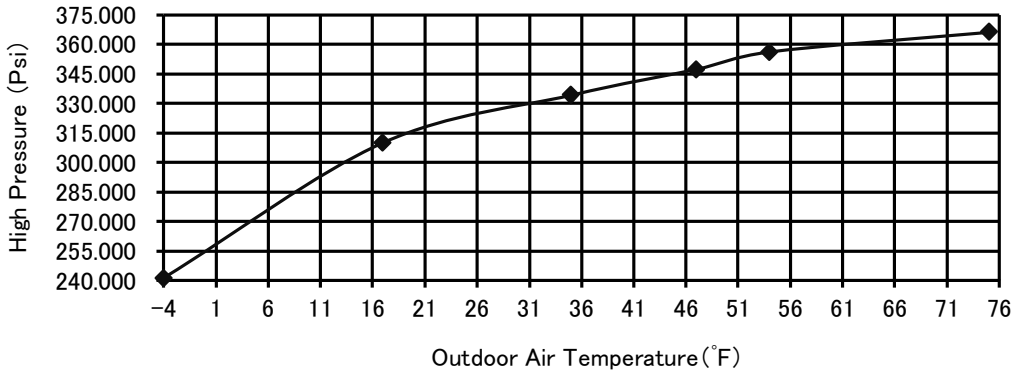

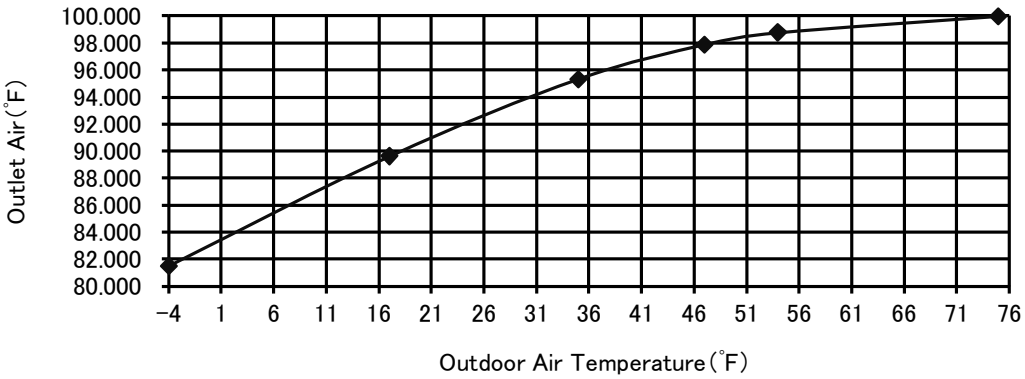

18.2.3 CS-E18SD3UAW CU-E18SD3UA

Condition

- Indoor room temperature: 68°F Dry Bulb/ -°F Wet Bulb
- Unit setting: Standard piping length, forced heating at 86°F, Hi fan
- Compressor frequency: Rated for Heating operation
- Voltage: 208V/230V

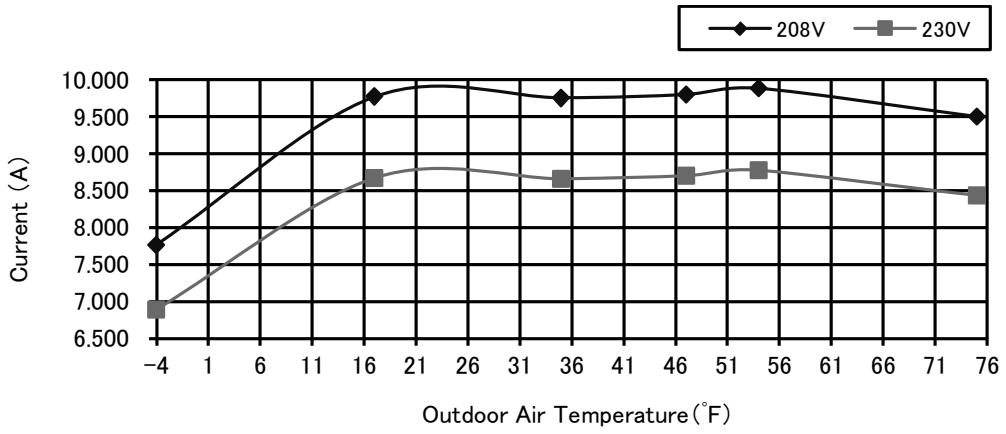

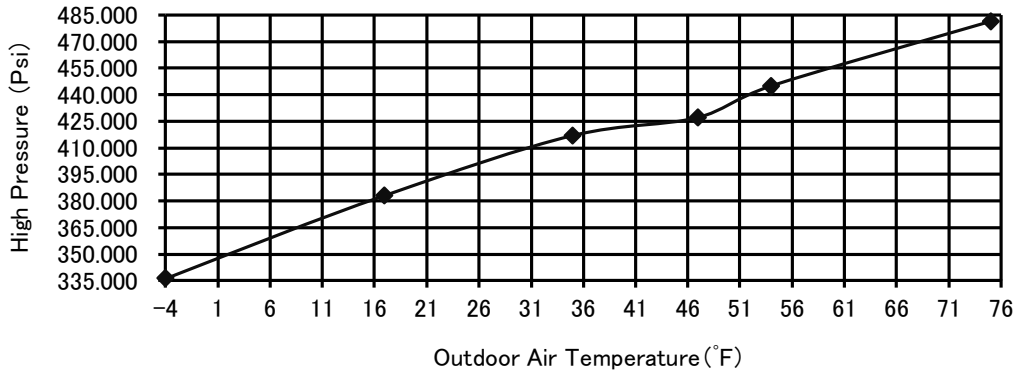

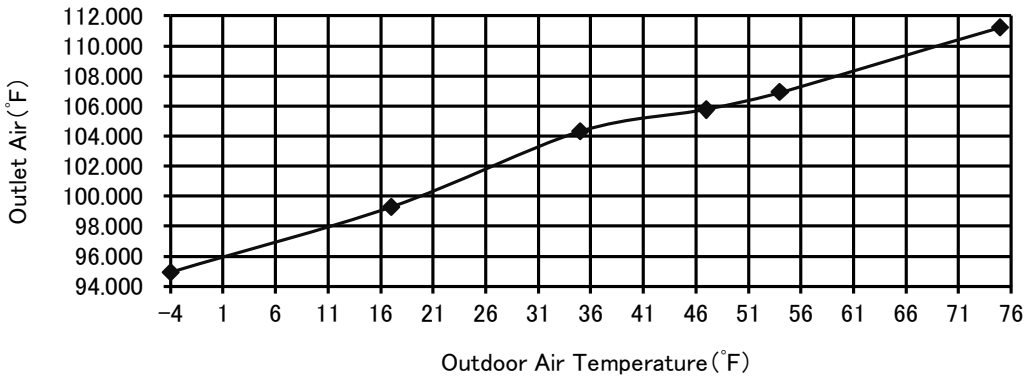

18.3 Piping Length Correction Factor

The characteristic of the unit has to be corrected in accordance with the piping length.

18.3.1 Cooling Capacity

18.3.1.1 CS-E9SD3UAW CU-E9SD3UA CS-12SD3UAW CU-12SD3UA

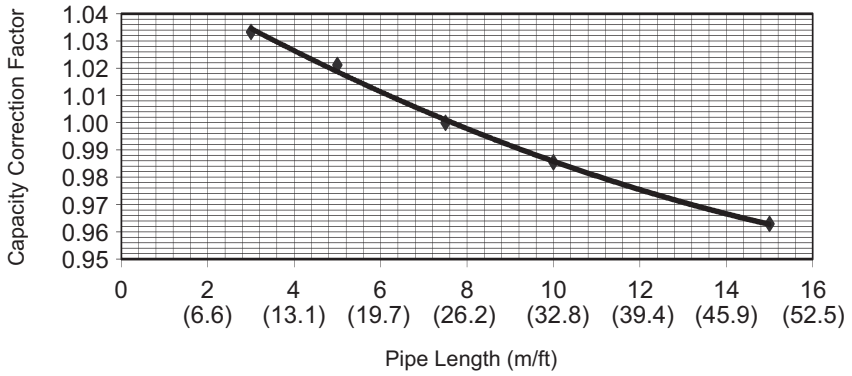

3 (9.8)	1.0334
5 (16.4)	1.0212
7.5 (24.6)	1.0000
10 (32.8)	0.9855
15 (49.2)	0.9629

18.3.1.2 CS-E18SD3UAW CU-E18SD3UA

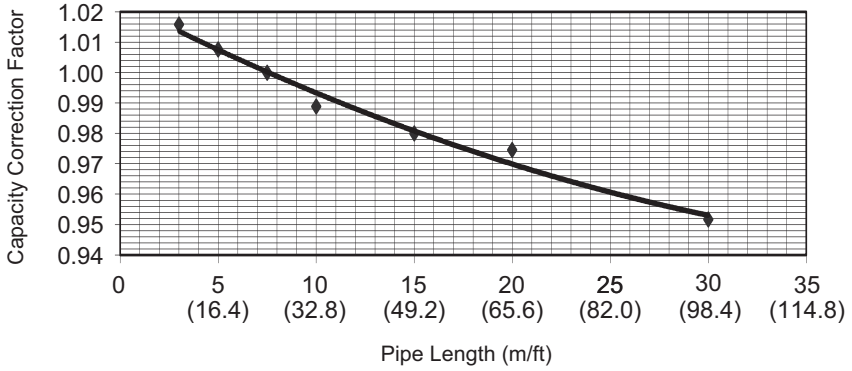

3 (9.8)	1.0159
5 (16.4)	1.0076
7.5 (24.6)	1.0000
10 (32.8)	0.9889
15 (49.2)	0.9800
20 (65.6)	0.9746
30 (98.4)	0.9516

Note: The graphs show the factor after added right amount of additional refrigerant.

18.3.2 Heating Capacity

18.3.2.1 CS-E9SD3UAW CU-E9SD3UA CS-12SD3UAW CU-12SD3UA

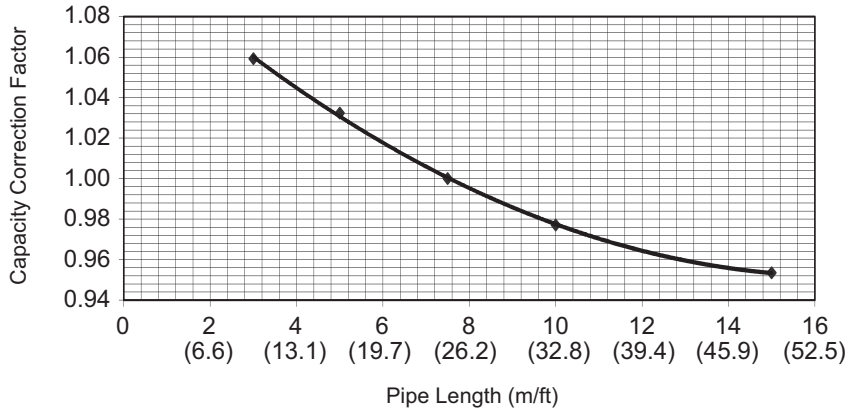

3 (9.8)	1.0593
5 (16.4)	1.0323
7.5 (24.6)	1.0000
10 (32.8)	0.9771
15 (49.2)	0.9535

18.3.2.2 CS-E18SD3UAW CU-E18SD3UA

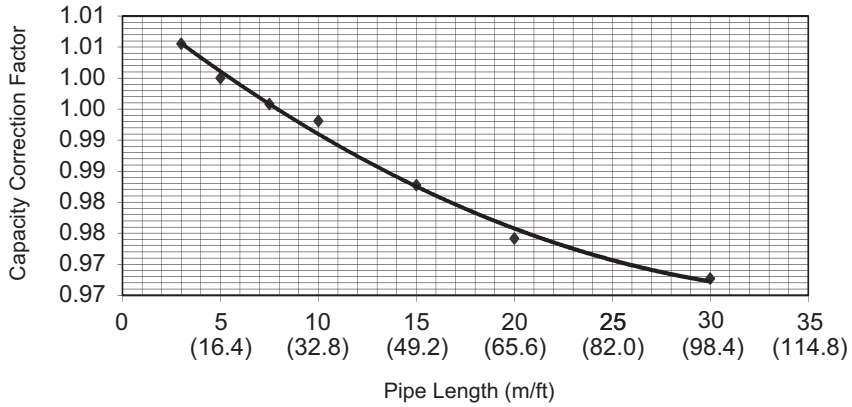

3 (9.8)	1.0056
5 (16.4)	1.0000
7.5 (24.6)	0.9958
10 (32.8)	0.9931
15 (49.2)	0.9828
20 (65.6)	0.9741
30 (98.4)	0.9677

Note: The graphs show the factor after added right amount of additional refrigerant.

19. Exploded View and Replacement Parts List

19.1 Indoor Unit

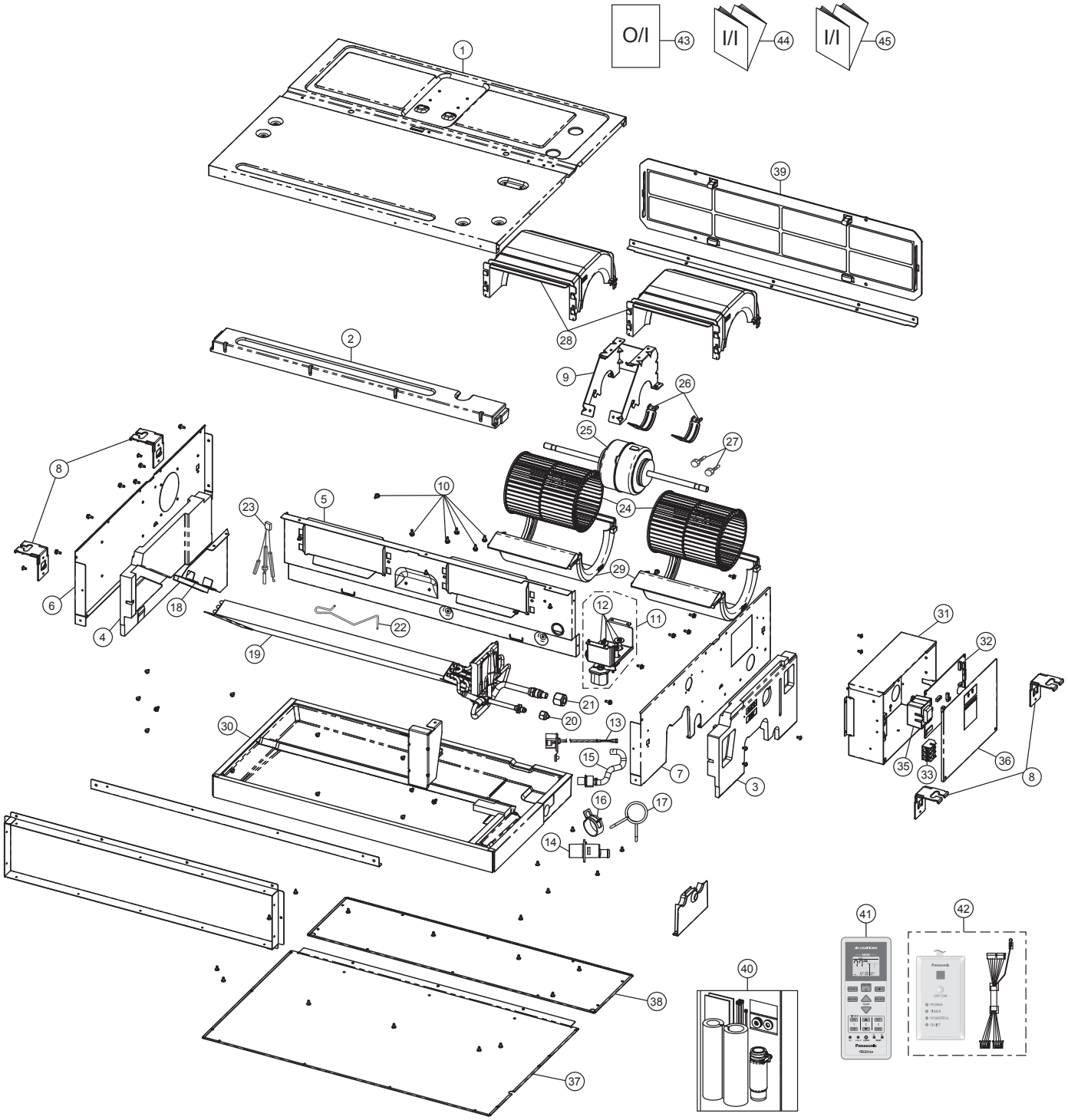

Note:
The above exploded view is for the purpose of parts disassembly and replacement.
The non-numbered parts are not kept as standard service parts.

SAFETY	REF NO.	PART NAME & DESCRIPTION	QTY.	CS-E9SD3UAW	CS-E12SD3UAW	CS-E18SD3UAW	REMARK
	1	CABINET TOP PLATE - COMPLETE	1	CWE03C1169	←	←	
	2	FOAMED STYRENE COMPLETE	1	ACXG07C00070	←	←	
	3	FOAMED STYRENE COMPLETE	1	CWG07C1092	←	←	
	4	FOAMED STYRENE COMPLETE	1	CWG07C1093	←	←	
	5	BULKHEAD	1	CWD531059	←	←	
	6	CABINET SIDE PLATE - COMPLETE	1	CWE04C1565	←	←	
	7	CABINET SIDE PLATE - COMPLETE	1	CWE04C1566	←	←	
	8	PARTICULAR PLATE	4	CWD912571	←	←	
	9	FAN MOTOR BRACKET	1	CWD541246	←	←	
	10	SCREW - FAN MOTOR BRACKET	6	CWH55406J	←	←	
	11	PUMP - COMPLETE	1	ACXB53C00020	←	←	O
	12	ANTI - VIBRATION BUSHING	3	CWH501131	←	←	
	13	FLOAT SWITCH COMPLETE	1	CWA12C1034	←	←	O
	14	DRAIN NOZZLE	1	CWH411027	←	←	
	15	FLEXIBLE PIPE - COMPLETE	1	CWH85C1120	←	←	
	16	PLATE SPRING	1	CWH711022	←	←	
	17	WIRE SPRING	1	CWH722018	←	←	
	18	PARTICULAR PIECE - COMPLETE	1	CWD93C1191	←	←	
	19	FIN & TUBE EVAPORATER - COMPLETE	1	ACXB30C01510	ACXB30C01250	←	
	20	FLARE NUT (1/4)	1	CWT251030	←	←	
	21	FLARE NUT (1/2)	1	CWT251031	CWT251032	←	
	22	HOLDER - SENSOR	2	CWH32143	←	←	
	23	SENSOR COMPLETE	1	ACXA50C00030	←	←	O
	24	BLOWER WHEEL ASS'Y	2	CWH01K1041	←	←	
⚠	25	FAN MOTOR	1	L6CBYYYL0179	←	←	O
	26	FAN MOTOR BRACKET	2	CWD541265	←	←	
	27	SCREW - FAN MOTOR BRACKET	1	CWH551049J	←	←	
	28	AIR GUIDER B.W.	2	CWD321112	←	←	
	29	AIR GUIDER B.W.	2	CWD321113	←	←	
	30	DRAIN PAN - COMPLETE	1	CWH40C1134	←	←	
	31	CONTROL BOARD A'SSY	1	ACXH10K00130	←	←	
⚠	32	ELECTRONIC CONTROLLER - (MAIN)	1	ACXA73C06420	ACXA73C06430	ACXA73C06440	O
⚠	33	TERMINAL BOARD ASS'Y	1	CWA28K1161	←	←	O
⚠	35	TRANSFORMER - COMPLETE	1	CWA40C1027	←	←	O
	36	CONTROL BOARD COVER	1	ACXH13C00080	←	←	
	37	CABINET BOTTOM PLATE - COMPLETE	1	CWE05C1014	←	←	
	38	CABINET TOP PLATE	1	CWE031215	←	←	
	39	AIR FILTER	1	CWD001390	←	←	
	40	ACCESSORY - COMPLETE	1	CWH82C2111	←	←	
	41	REMOTE CONTROL COMPLETE	1	ACXA75C01440	←	←	O
	42	ACCESSORY - COMPLETE (RECEIVER)	1	ACXH82C00420	←	←	O
	43	OPERATING INSTRUCTION	1	ACXF55-01620	←	←	
	44	INSTALLATION INSTRUCTION	1	ACXF60-02380	←	←	
	45	INSTALLATION INSTRUCTION	1	ACXF60-02390	←	←	

(Note)

- All parts are supplied from PAPAMY, Malaysia (Vendor Code: 00029488).
- “O” marked parts are recommended to be kept in stock.

19.2 Outdoor Unit

19.2.1 CU-E9SD3UA CU-E12SD3UA

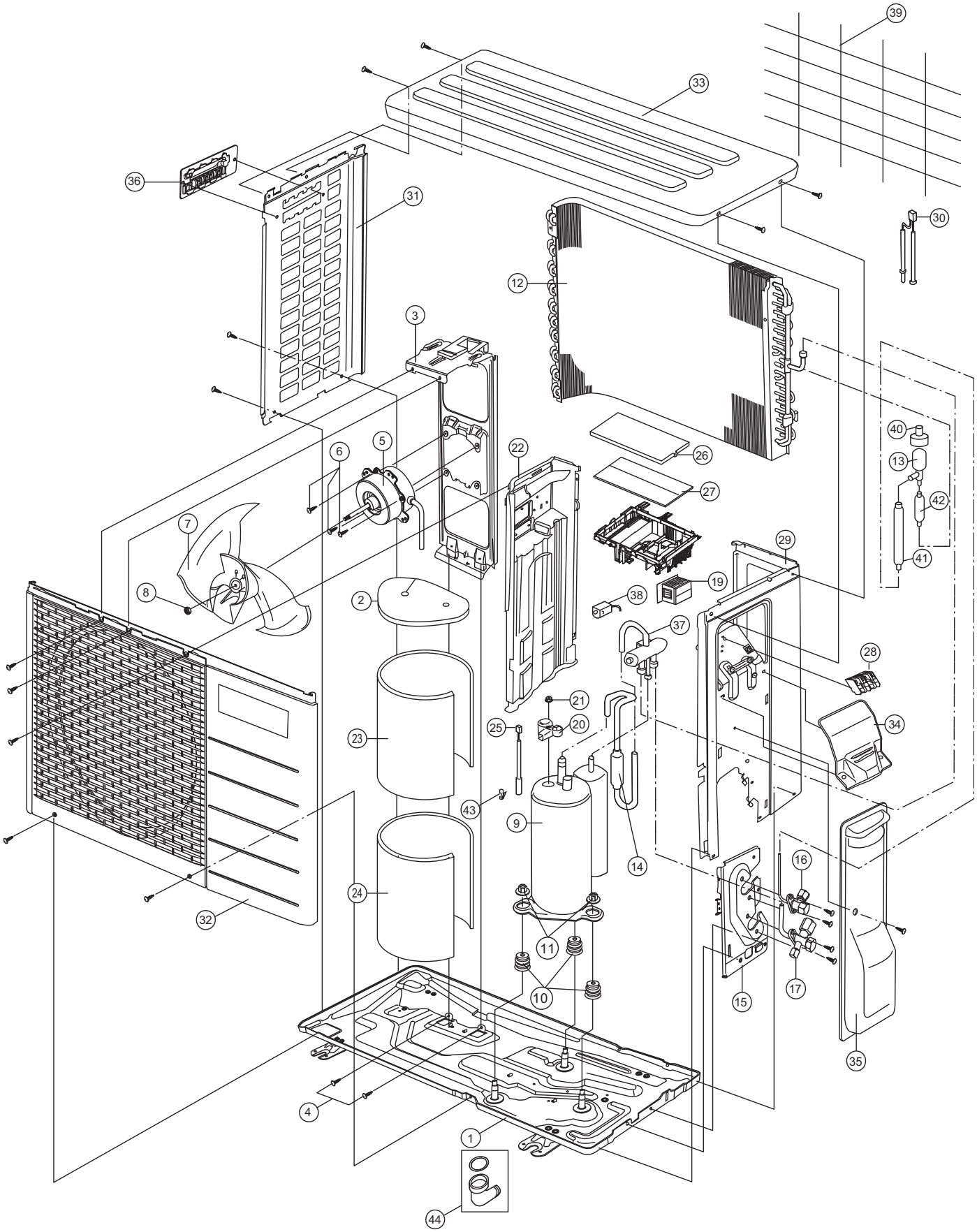

Note:
The above exploded view is for the purpose of parts disassembly and replacement.
The non-numbered parts are not kept as standard service parts.

SAFETY	REF NO.	DESCRIPTION & NAME	QTY.	CU-E9SD3UA	CU-E12SD3UA	REMARK
	1	CHASSY ASSY	1	CWD50K2081A	←	
	2	SOUND PROOF MATERIAL (TOP)	1	CWG302570	←	
	3	FAN MOTOR BRACKET	1	CWD541089	←	
	4	SCREW - BRACKET FAN MOTOR	2	CWH551217	←	
⚠	5	FAN MOTOR	1	ARW6404AC	←	O
	6	SCREW - FAN MOTOR MOUNT	3	CWH55252J	←	
	7	PROPELLER FAN ASSY	1	CWH03K1014	←	
	8	NUT - PROPELLER FAN	1	CWH56053J	←	
⚠	9	COMPRESSOR	1	5RS102XHA21	←	O
	10	ANTI - VIBRATION BUSHING	3	CWH50077	←	
	11	NUT - COMPRESSOR MOUNT	3	CWH56000J	←	
	12	CONDENSER COMPLETE	1	CWB32C3394	CWB32C4129	
	13	EXPANSION VALVE	1	CWB051078	←	O
	14	DISCHARGE MUFFLER (4 WAY VALVE)	1	CWB121047	←	
	15	HOLDER COUPLING	1	CWH351015A	CWH351231A	
	16	2-WAYS VALVE (LIQUID)	1	CWB021180J	CWB021654	
	17	3-WAYS VALVE (GAS)	1	CWB011374	CWB011367	O
⚠	19	REACTOR	1	G0C193J00002	G0C193J00004	O
	20	TERMINAL COVER	1	CWH171001	←	
	21	NUT - TERMINAL COVER	1	CWH7080300J	←	
	22	SOUND PROOF BOARD	1	CWH151172A	←	
	23	SOUND PROOF MATERIAL (BODY)	1	CWG302292	←	
	24	SOUND PROOF MATERIAL	1	CWG302569	←	
	25	SENSOR COMPLETE (COMP TEMP)	1	CWA50C2340	←	O
	26	CONTROL BOARD TOP COVER	1	CWH131264	←	
⚠	27	ELECTRONIC CONTROLLER - MAIN	1	ACXA73C06450R	ACXA73C06460R	O
⚠	28	TERMINAL BOARD ASSY	1	CWA28K1154	←	O
	29	CABINET SIDE PLATE CO. (RIGHT)	1	CWE04C1226	CWE04C1558	
	30	SENSOR-COMPLETE (AIR & PIPE SENSOR)	1	CWA50C2793	CWA50C3315	O
	31	CABINET SIDE PLATE (LEFT)	1	CWE041492A	←	
	32	CABINET FRONT PLATE COMPLETE	1	CWE06C1142	←	
	33	CABINET TOP PLATE	1	CWE031018A	←	
	34	CONTROL BOARD COVER	1	CWH131301	←	
	35	CONTROL BOARD COVER CO. (O)	1	CWH13C1345	←	
	36	HANDLE	1	CWE161010	←	
	37	4-WAYS VALVE	1	CWB001058	←	O
⚠	38	V-COIL COMPLETE (4 WAY VALVE)	1	CWA43C2432	←	O
	39	WIRE NET	1	CWD041161A	←	
⚠	40	V-COIL COMPLETE (EXP. VALVE)	1	CWACXA43C00320	←	O
	41	DISCHARGE MUFFLER (EXP. VALVE)	1	CWB121021	←	
	42	STRAINER	1	CWB111061	←	
	43	CLIP FOR SENSOR	1	CWH321010	←	
	44	ACCESSORY CO. (DRAIN ELBOW)	1	CWG87C900	←	

(NOTE)

- All parts are supplied from PAPAMY, Malaysia (Vendor Code: 00029488).
- “O” marked parts are recommended to be kept in stock.

19.2.2 CU-E18SD3UA

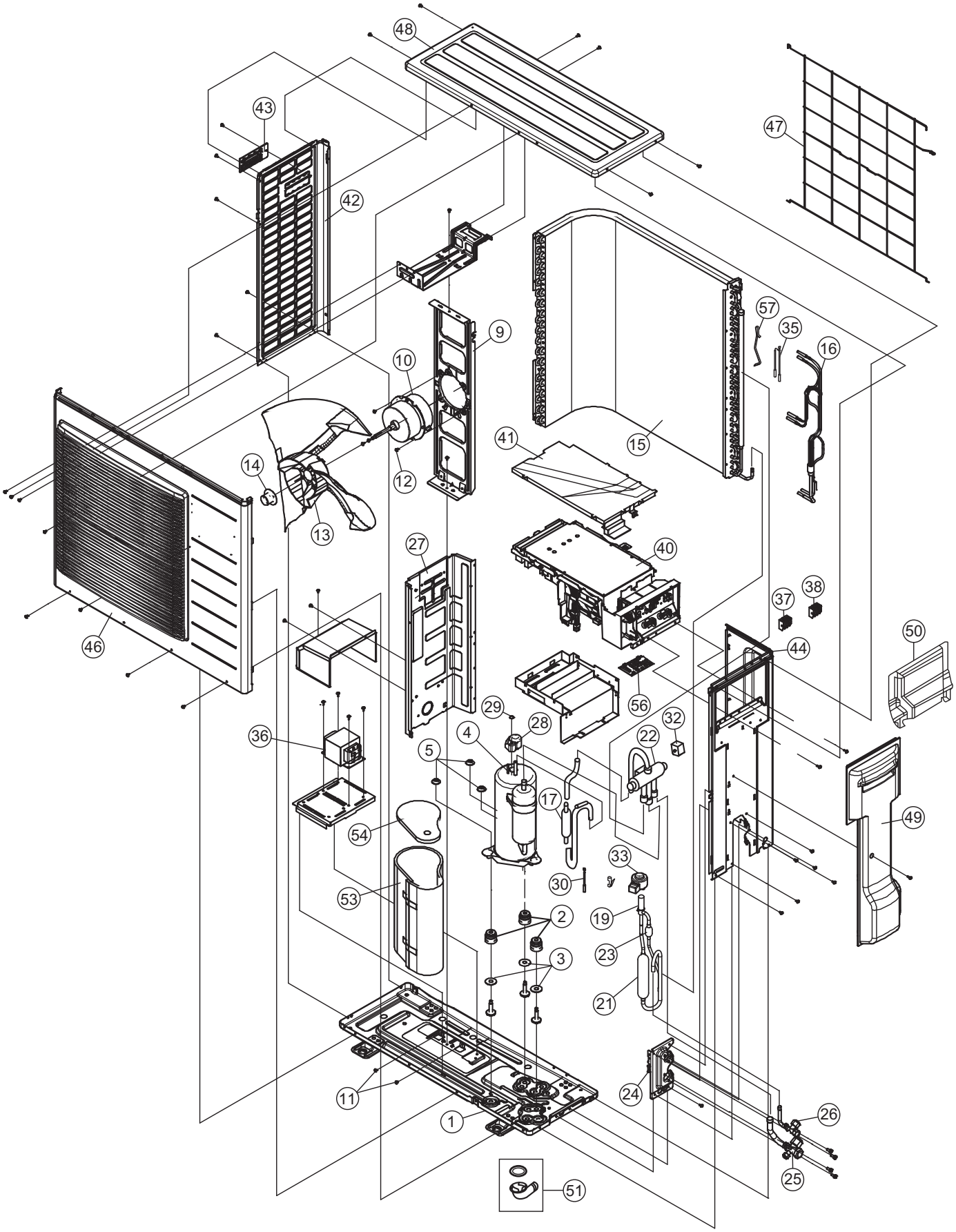

Note:
The above exploded view is for the purpose of parts disassembly and replacement.
The non-numbered parts are not kept as standard service parts.

SAFETY	REF NO.	DESCRIPTION & NAME	QTY.	CU-E18SD3UA	REMARK
	1	CHASSY ASSY	1	CWD52K1228A	
	2	ANTI - VIBRATION BUSHING	3	CWH50055	
	3	PACKING	3	CWB81043	
⚠	4	COMPRESSOR	1	5KD240XAF21	O
	5	NUT - COMPRESSOR MOUNT	3	CWH561049	
	9	FAN MOTOR BRACKET	1	CWD541127	
⚠	10	FAN MOTOR	1	EHDS80CAC	O
	11	SCREW - BRACKET FAN MOTOR	2	CWH551217	
	12	SCREW - FAN MOTOR MOUNT	4	CWH551323	
	13	PROPELLER FAN ASSY	1	CWH00K1006	
	14	NUT - PROPELLER FAN	1	CWH561092	
	15	CONDENSER COMPLETE	1	CWB32C3516	
	16	TUBE ASSY CO (CAPILLARY TUBE)	1	CWT01C6093	
	17	DISCHARGE MUFFLER	1	CWB121055	
	19	EXPANSION VALVE	1	CWB051018J	O
	21	RECEIVER	1	CWB14030	
	22	4-WAYS VALVE	1	CWB001057	O
	23	STRAINER	1	CWB111076	
	24	HOLDER COUPLING	1	CWH351228A	
	25	3-WAYS VALVE (GAS)	1	CWB011672	O
	26	2-WAYS VALVE (LIQUID)	1	CWB021464	
	27	SOUND PROOF BOARD	1	CWH151197	
	28	TERMINAL COVER	1	CWH171039A	
	29	NUT - TERMINAL COVER	1	CWH7080300J	
	30	SENSOR COMPLETE (COMP TEMP)	1	CWA50C2343	O
⚠	32	V-COIL COMPLETE (4 WAY VALVE)	1	CWA43C2392	O
⚠	33	V-COIL COMPLETE (EXP. VALVE)	1	CWA43C2393	O
	35	SENSOR - COMPLETE (AIR & PIPE TEMP)	1	CWA50C2710	O
⚠	36	REACTOR	1	G0C452J00002	O
⚠	37	TERMINAL BOARD ASSY	1	CWA28K1076J	O
⚠	38	TERMINAL BOARD ASSY	1	CWA28K1277	
⚠	40	ELECTRONIC CONTROLLER - MAIN	1	ACXA73C06470R	O
	41	CONTROL BOARD TOP COVER	1	CWH131333	
	42	CABINET SIDE PLATE (LEFT)	1	CWE041490A	
	43	HANDLE	1	CWE161010	
	44	CABINET SIDE PLATE (RIGHT)	1	CWE041488A	
	46	CABINET FRONT PLATE COMPLETE	1	CWE06K1070	
	47	WIRE NET	1	CWD041128A	
	48	CABINET TOP PLATE	1	CWE031131A	
	49	CONTROL BOARD COVER CO. (O)	1	CWH13C1210	
	50	CONTROL BOARD COVER	1	CWH131332	
	51	ACCESSORY CO. (DRAIN ELBOW)	1	CWG87C900	
	53	SOUND PROOF MATERIAL (BODY)	1	CWG302989	
	54	SOUND PROOF MATERIAL (TOP)	1	CWG302246	

SAFETY	REF NO.	DESCRIPTION & NAME	QTY.	CU-E18SD3UA	REMARK
⚠	56	ELECTRONIC CONTROLLER (NOISE FILTER)	1	CWA748363	
	57	CLIP FOR SENSOR	1	CWH711010	

(NOTE)
- All parts are supplied from PAPAMY, Malaysia (Vendor Code: 00029488).
- “O” marked parts are recommended to be kept in stock.

[PAPAMY] Printed in Malaysia
YB0816-2